Breakers and Switches

Enclosed switches and fusegear
Enclosed switch-disconnectors, change-over switches and switch fuses

Power and productivity
for a better world™

Enclosed switch-disconnectors, change-over switches and switch fuses

Contents

4 Product overview, features

8 Technical data

12 Enclosed switch-disconnectors, ordering information
12 Plastic enclosed, IP65
12 Side and front operated / 2-, 3-, 4- and 6-pole
18 Red-yellow / Side and front operated / 3-, 4- and 6-pole
22 Red-yellow / DC solar switches / 2-, 3- and 4-pole
23 Steel sheet enclosed
23 Front operated, IP65 / 3-, 4- and 6-pole
28 Front operated, IP54 / 3- and 4-pole
30 Red-yellow / Front operated, IP65 / 3-, 4- and 6-pole
32 Stainless steel sheet enclosed, IP65
32 Front operated / 3-, 4- and 6-pole
34 Red-yellow / Front operated / 3-, 4- and 6-pole
36 Aluminum enclosed, IP65
36 Side and front operated / 2-, 3- and 4-pole
39 Fireman's switch / 2-, 3- and 4-pole

40 Enclosed change-over switches, ordering information
40 Steel sheet enclosed, IP54
40 Front operated / 3- and 4-pole

41 Enclosed switch fuses, ordering information
41 Plastic enclosed, IP65
41 BS and DIN-type / 3- and 4-pole
43 Steel sheet enclosed, IP65, IP54
43 BS and DIN-type / 2-, 3- and 4-pole

48 Accessories, selection overview
50 Accessories, ordering information

60 Dimension drawings
71 Auxiliary contacts / enclosed switches
75 Index

Enclosed switches from 16 to 1600 Amperes

Enclosed switch-disconnectors from 16 to 1600 Amperes
Enclosed change-over switches from 16 to 800 Amperes
Enclosed switch fuses from 20 to 800 Amperes

Plastic

IP65
Black / red-yellow handle types

			Side operated			Front operated	
Switch-disconnectors			**BW_16..._25**	**BW_40**	**BW625...640**	**OTP16**	**OTP16...32**
Rated operational current,	2-pole	[A]	25*	40*		-	-
AC22A, up to 690V	3-pole	[A]	16* 25*	40*		16	25 40
	4-pole	[A]	25*	40*		-	16 25 40
	6-pole	[A]	-	-	25* 40*	-	16 25 40
Switch fuses, BS / DIN -types							
Rated operational current,	3-pole, BS type	[A]					
AC22A, up to 690V	4-pole, BS type	[A]					
	3-, 4-pole, DIN type	[A]					

* 500V

Steel sheet

IP65, IP54
Black / red-yellow handle types

			Front operated		
Switch-disconnectors			**OT16...63**	**OT125**	**OTL16...63**
Rated operational current,	3-, 4-pole	[A]	16 25 40 63 80	125	16 25 40 63 80
AC22A, up to 690V	6-pole	[A]	-	16 25 40 63 80	16 25 40
Change-over switches				**OT16...63_C**	
Rated operational current,	3-pole	[A]		16 25 32 45 63	
AC22A, up to 690V	4-pole	[A]		-	
Switch fuses, BS / DIN -types				**OS20...63**	
Rated operational current,	2-pole, BS type	[A]		-	
AC22A, up to 690V	3-, 4-pole, BS type	[A]		20 32	
	3-, 4-pole, DIN type	[A]		-	

* 500V

Aluminum

IP65
Black / red handle types

			Side operated		Front operated
Switch-disconnectors			**KSE_25**	**KSE_40**	**KSE_63..._125**
Rated operational current,	2-pole	[A]	25	40	-
AC22A, up to 500V	3-pole	[A]	25	40	63 80 125
	4-pole	[A]	25	40	63 80

Accessories

- Cable glands and entries
- Auxiliary contacts
- Padlock shackle

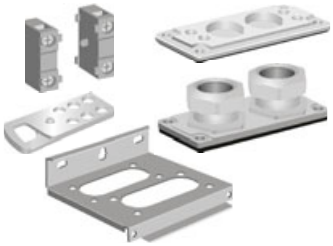

OTP45...63	OTP100...125	OT160...800	DC Solar switches OTDCP16...32
-	-	-	DC21
63 80	100 125	160 200 250 315 400 570 720	660 V DC 16 25 32
63 80	125	160 200 250 315 400 570 720	1000 V DC 16 25 32
45 63	125	160 200 250 315 400 570 720	1000/2X660 V DC 16 25 32

OS20...32	OS32...400
20 32	32* 63* 135* 200 315 400
20 32	32* 63* 100* 200
-	32* 63* 125* 135* 250 400

Stainless steel sheet

IP65
Black / red-yellow
handle types

OTL100...125	OT160...1600	OTR16...63	OTR100...125
100 125	125 160 200 250 315 400 570 720 1000 1250 1600	16 25 40 63 80	100 125
63 80	125 160 200 250 315 400 570 720	16 25 40	63 80
	OT160...800_C		
	160 200 250 315 400 570 720		
	160 200 250 315 400 570 720		
	OS20...800		
	32* 63* 125* 135* 200 315 400 600 720 720		
	20* 32* 63* 125* 135* 200 315 400		
	32* 63* 125* 135* 250 400 600 720		

Fireman's switch

KSE3160...3630	KSF_25	KSF_40
-	25	-
160 250 315 500 630	25	40
-	25	40

Complete range for various applications
From 16 to 1600 Amperes, 690 V

Enclosed switches are designed and used as main switches for applications, which need to be isolated from the network. The range includes front operated and side operated switch disconnectors, switch fuses and change-over switches enclosed in plastic, steel sheet or stainless steel sheet and aluminum enclosures. They are rated for utilization categories including disconnecting as well as making and breaking the load. In addition the switch fuses equipped with fuse links protects the application and the cables from overload currents and short circuits.

Plastic enclosures
The plastic enclosures are most suitable for locations with high chemical and moisture requirements. In addition they are light and easy to install and handle.

Steel sheet enclosures
The steel sheet enclosures are hot dip galvanized and the surface is polyester powder painted. The enclosures are durable and robust for various environments.

Stainless steel sheet enclosures
The stainless steel sheet enclosures are made of AISI 304 stainless steel. They are used particularly in the food and beverage industry and in locations where high hygienie is required. The smooth surface does not require any painting and is easy to clean.

Aluminum alloy enclosures
Aluminum enclosures have very good impact strength and protection against UV light. They are suitable both for indoor and outdoor use in medium to heavy-duty applications.

Safety for personnel – reliable position indication
- Padlocking in the OFF-position with one, three or six (with the shackle L6) padlocks against unintentional start-up. The handle cannot be padlocked in the OFF-position if one of the contacts is not in the OFF position.
- The cover cannot be removed if the handle is padlocked.
- Door interlock in the ON-position.
- Arc proof, short circuit durability function: Expander washers in aluminium enclosures with I_e > 160 A and door locking release in large metal sheet enclosures type MSC.
- Door interlock defeatable with rectangular and pistol type handles.

Plastic enclosed switch-disconnectors

Side operated, type BW

- Degree of protection: IP65, IEC 60529
- Degree of protection without cover: IP20
- Enclosure in PBT (Thermoplastic polyester) plastic, high impact strength and chemical resistant
- Flame class UL94 5VA, Glow wire 850° (IEC 60695-2-12)
- Resistance against UV-radiation: F 1, UL 746C
- Standard IEC 60947-3 for Switch-disconnectors
- European Standard EN60204 Safety of machinery
- Cable outlets M sized threaded knock-outs
- 2-, 3-, 4- and 6-pole versions
- Light grey/dark grey enclosure with grey handle
- Yellow enclosure have red handle
- Handle indication I-0/ON-OFF
- Suitable for 3-, 4- and 5-wire systems

Front operated, type OTP

- Degree of protection: IP65, IEC 60529
- Degree of protection without cover: IP20, IEC 60529
- Self-extinguishing plastic: UL94 V0
- Resistance against UV-radiation: F 1, UL 746C
- Standard IEC 60947-3 for Switch-disconnectors
- European Standard EN60204 Safety of machinery
- Cable outlets M or Pg sized threaded knock-outs
- Also blank gland plates available
- 3-, 4- and 6-pole versions
- Black or red-yellow handle
- Handle indication I-0/ON-OFF
- Suitable for 4- and 5-wire systems

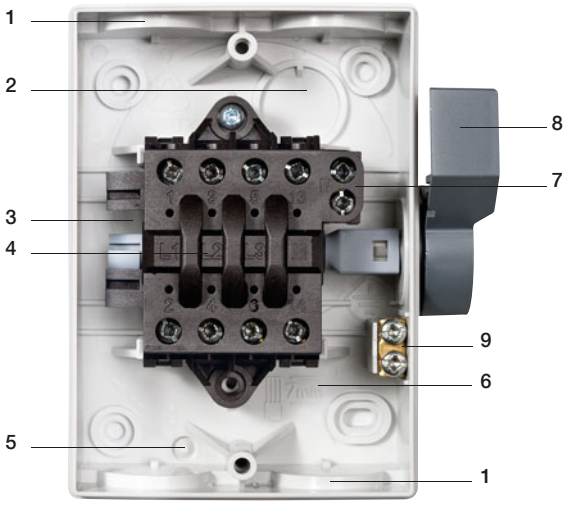

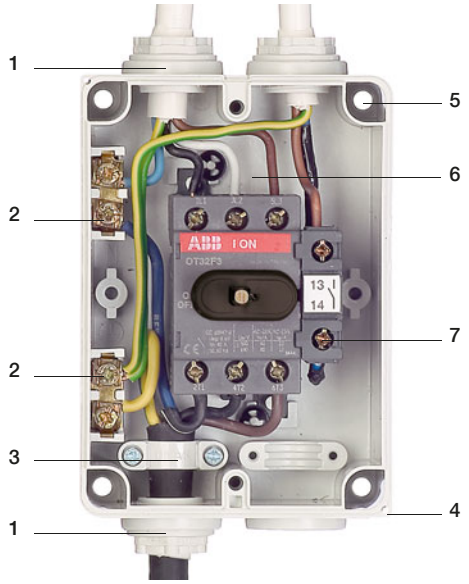

1 Metric threaded knockouts, IP54 cable glands sealing plugs included | 2 Knockout in the back of the box | 3 Space for auxiliary contacts, (N.O./N.C.) | 4 Handle, axis and switch insert is one system factory assembled. Switch insert UL94 V0 and glow wire 960° (IEC 60965-2-12) | 5 Knockout for ventilation / Water drain holes | 6 Cable strip length | 7 Isolated neutral terminal with separate in/out connection | 8 Handle padlockable in "O" position as standard. Knockout for padlock in "I" position. Shackle for 6 padlocks | 9 PE-terminal

1 Knock-out openings for M or Pg threads on the top and bottom, separate threaded knock-out opening for control wires in enclosure sizes width 130 mm and larger | 2 Terminals for 5-wire system: three phases + N + PE terminals | 3 Pull stoppers for two cables in 16 A enclosed switches | 4 Provision for sealing of the lid | 5 Enclosure mounting screws isolated from the inside housing | 6 Knock-out opening on the base for incoming cables | 7 Space for auxiliary contacts, (N.O./N.C.) (to be ordered separately)

Technical data
Enclosed switch-disconnectors

Enclosed switch-disconnectors, types OTP, OT, OTL and OTR, enclosed change-over switches, types

Technical data according to IEC60529 and IEC 60947-3

Type/size			OT_ 16	OT_ 25	OT_ 32	OT_ 45*	OT_ 63*	OT_ 100	OT_ 125_
Rated insulation voltage		V	750	750	750	750	750	750	750
Rated thermal current and rated	40°C	A	25	32	40	63	80	115	125
operational current AC20/DC20	60°C	A	20	25	32	50	63	80	100
Rated operational current,	400V	A	16	25	40	63	80	100	125
AC-21A and AC-22A	up to 500V	A	16	25	40	63	80	100	125
	690V	A	16	25	40	63	80	100	125
Rated operational current,	up to 415V	A	16	20	23	45	75	80	90
AC-23A	440V	A	16	20	23	45	63	65	78
	500V	A	16	20	23	45	58	60	70
	690V	A	10	11	12	20	20	40	50
Rated conditional short-circuit	50kA, 415V	kA	6.5	6.5	6.5	13	13	16.5	18
current r.m.s and corresponding	Fuse size: gG/aM	A	40/32	40/32	40/32	100/80	100/80	125/125	125/100
cut-off current of the fuse in single-	50kA, 690V	kA	4	4	4	11	11	10	12
phase test according to IEC60269	Fuse size: gG/aM	A	25/16	25/16	25/16	80/63	80/63	63/63	125/100
Cu-wire size suitable for terminal		mm²	0.75-10	0.75-10	0.75-10**	1.5-25**	1.5-25**	10-70	10-70
Terminal bolt size									
Used switch type			OT16_	OT25_	OT40_	OT63_	OT80_	OT100_	OT125F_

* Lower ratings on plastic 6-pole versions. See ordering information.
** Please note the maximum diameter of the cable is limited by the cable outlets. See the extension adapters in ordering information of accessories.
*** Change-over switches, types OT160ELAA3C/_4C

Enclosed switch-disconnectors, types BW, KSE and KSF

Technical data according to IEC60529 and IEC 60947-3

Type/size			BW _16	BW KSE KSF _25	BW KSE KSF 240	BW KSE KSF _40
Rated insulation voltage		V	690	690	690	690
Rated thermal current and rated	40°C	A	16	25	40	40
operational current AC20/DC20	60°C	A				
Rated operational current,	400V	A	16	25	40	40
AC-21A and AC-22A	500V	A	16	25	40	40
	690V	A	16	16	32	32
Rated operational current,	400V	A	16	16	32	25
AC-23A	440V	A	16	16	25	25
	500V	A	10	16	25	25
	690V	A	10	10	16	16
Rated conditional short-circuit	25kA, 500V	kA	4.8	4.8	4.8	4.8
current r.m.s and corresponding	50kA, 415V	kA				
cut-off current of the fuse in single-	Fuse size: gG/aM	A	50/50	50/50	50/50	50/50
phase test according to IEC60269	50kA, 690V	kA				
	Fuse size: gG/aM	A				
Cu-wire size suitable for terminal		mm²	1.5-4	1.5-4		2.5-10
Terminal bolt size						

OT 125A	OT 160	OT_C*** 160	OT 200	OT 250	OT 315	OT 400	OT 630	OT 800	OT 1000	OT 1250	OT 1600
750	750	1000	1000	1000	1000	1000	1000	1000	690	690	690
135	160	160	200	250	315	400	570	720	1000	1250	1600
125	125	160	200	250	315	320	460	580	900	1000	1250
125	160	160	200	250	315	400	570	720	1000	1250	1600
125	160	160	200	250	315	400	570	720	1000	1250	1600
125	160	160	200	250	315	400	570	720	1000	1250	1600
105	135	160	200	250	315	400	570	720	1000	1250	1250
90	125	160	200	250	315	400	570	720	1000	1250	1250
70	125	160	200	250	315	400	570	720	1000	1250	1250
50	80	160	200	250	315	400	570	720	1000	1250	1250
24	24	35	35	35	50.5	50.5	71.5	71.5	105	105	105
200/250	200/250	355/315	355/315	335/315	500/500	500/500	800/1000	800/1000			
24	24	35	35	35	50.5	50.5	71.5	71.5	105	105	105
200/250	200/250	355/315	355/315	355/315	500/500	500/500	800/1000	800/1000			
10-70	10-70										
		M8x25	M8x25	M8x25	M10/30	M10/30	M12/40	M12/40	M12/60	M12/60	M12/60
OT125A_	OT160_	OT160_C	OT200_	OT250_	OT315_	OT400_	OT630_	OT800_	OT1000_	OT1250_	OT1600_

KSE _63	KSE _80	KSE _125	KSE _160	KSE _250	KSE _315	KSE _500	KSE _630
750	750	750	690	1000	1000	1000	1000
63	80	125	160	270	315	500	630
50	63	100					
63	80	125	160	250	315	500	630
63	80	125	160	250	315	500	630
63	80	125	160	250	315	500	630
63	75	90	125	250	315	500	630
63	65	78	125	250	315	500	580
45	58	70	90	250	315	500	580
20	20	50	70	250	315	350	350
		18	24	35	50.5	50.5	71.5
		125/100	200/250	335/315	500/500	500/500	800/1000
		12	24	35	50.5	50.5	71.5
		125/100	200/250	355/315	500/500	500/500	800/1000
1.5-35	1.5-35	10-70	10-70				
				M8x25	M10/30	M10/30	M12/40

Technical data/colour codes
Enclosed switch-disconnectors (DC) and switch fuses

Enclosed switch-disconnectors, type OTDCP, DC rated switches

Technical data according to IEC 60947

Switch size		A	OTDCP16	OTDCP25	OTDCP32
Rated insulation voltage	Pollution degree 2	V	1250	1250	1250
	Pollution degree 3	V	1000	1000	1000
Dielectric strength	50 Hz 1 min	kV	6	6	6
Rated impulse withstand voltage		kV	8	8	8
Rated thermal current I_{th}					
DC-20	In enclosure 40°C	A	25	32	45
	In enclosure 60°C	A	25	32	32
Rated operational current / poles in series	660 V	A	16/2	25/2	32/2
DC-21B	1000 V	A	16/3	25/3	32/3
	1000 V / 2x660 V[1]	A	16/4	25/4	32/4
Rated short-time withstand current, 1000 V, 1 s	R.M.S. -value I_{cw}	kA	0.4	0.6	0.8
Power loss / pole	At rated current	W	0.15	0.3	0.5

[1] 1000 V with all the poles connected in series, 600 V with 2 poles in series

Enclosed switch fuses, type OS

Technical data according to IEC 60529 and IEC 60947-3

Type/size			20	32
Rated insulation voltage		V	1000	1000
Rated impulse withstand voltage	U_{imp}	kV	12	12
Rated thermal current in ambient	40ºC	A	20	32
	60ºC	A	16	25
Rated operational current,	up to 500V	A	20	32
AC-22A	690V	A	20	32
Rated operational current,	up to 500V	A	20	32
AC-23A	690V	A	20	32
Rated conditional short-circuit current r.m.s and	80 kA, 415V	kA	9	9
corresponding max. allowed cut-off current, peak-	100kA, 500V	kA	7.5	7.5
values[2]	50kA, 690V	kA	6	6
Fuse types, IEC 269-2	DIN 43620		-	-
	BS 88		A1	A1
Max. fuse power dissipation		W	3	3.5
Used switch fuse size/type OS, OESA	DIN-type:		-	-
	BS-type:		-20P_	-32P_
Cu-wire size suitable for terminal		mm^2	0.7...10	0.7...10
Terminal bolt size				

[1] Utilisation category B
[2] The cut-off currents refer to single phase fuse tests

Colour codes of the enclosures / enclosed switches

	Colour code/cover	Colour code/box
Plastic enclosures		
BW, grey cover	RAL 7012	RAL 7035
BW, light grey cover	RAL 7035	RAL 7035
BW, yellow cover	RAL 1021	RAL 7035
OTP and OT, grey enclosure	RAL 7035	RAL 7035
Steel sheet enclosures		
OTL	RAL 7035	RAL 7035
OT	NCS 1704-Y15R	NCS 1704-Y15R
Aluminium enclosures		
LBAS_16…90	RAL 7012	RAL 7035
LBAS_125…630	RAL 7035	RAL 7035

32	63	125	160	200	250	315	400	630	800	1250
750	750	750	750	1000	1000	1000	1000	1000	1000	1000
12	12	12	12	12	12	12	12	12	12	12
32	63	125	135	200	250	315	400	570	720	1000
25	50	100	108	160	200	250	320	480	570	900
32	63	125	135	200	250	315	400	570	720	1000
-	63[1)]	125[1)]	135[1)]	200	250	315	400	570	720	1000
32	63	100	100	200	250	315	400	570	720	1000
-	40[1)]	50[1)]	50[1)]	200	250	315	400	570	720	1000
10	12	23	23	35	40.5	44	59	77	77	89
6	9	17	17	37.5	37.5		63.5	83	83	105
-	8	14	14	21	28	41	39	55	55	109
00	00	00	00	-	0-1	-	0-2	3	3	4, 4a
A2-A3	A2-A3	A2-A4	B1-B2	B1-B2	-	B1-B3	B1-B4	C1-C2	C1-C3	
7.5	7.5	12	9	22	23	32	34	45	55	85
-00 -32_	-00 -63_	-00_	-00 -160_	-	-250D_	-	-400D_	-630D_	-800D_	1250D_
-32G_	-63G_	-100G_	-160B_	-200B_	-	-315B_	-400B_	-630B_	-800B_	
2.5...20	2.5...20									
		M8x25	M8x25	M8x25	M10x30	M10x30	M10x30	M12x40	M12x40	M12x50

Ordering information
Plastic enclosed switch-disconnectors

BW225 DP
2CMC341011F0054

BW240 DP
2CMC341011F0056

BW225W/DP
2CMC341011F0062

2-pole side operated switch-disconnectors

Plastic enclosed, IP65

Enclosure in robust PBT plastic with metric threaded cable entries. Light grey box with dark grey cover and operating handle. Delivery includes PE terminal and membrane glands (IP54) / sealing plugs. For IP65 degree of protection compression glands must be used.

Rated operational current [A] AC22A 230V	400V	AC23A 400V	Cable sizes Up/Down	Enclosure size [mm] W	H	D	Type	Order number	Weight [kg]
25	25	16	2xM25/2xM25	111	130	60	BW225 DP	2CMA142400R1000	0.29
25	25	16	2xM25/2xM25	111	130	60	BW225 W/DP	2CMA142401R1000[1]	0.29
40	40	32	2xM32/ 2xM32+1xM16	138	168	68	BW240 DP	2CMA142407R1000	0.39

[1] Light grey cover for commercial/residential design

Ordering information
Plastic enclosed switch-disconnectors

BW316 TPN
BW325 TPN
2CMC341011F0054

BW325W/TPN
2CM341011F0062

BW340 TPN
2CMC341011F0056

3-pole side operated switch-disconnectors

Plastic enclosed, IP65

Enclosure in robust PBT plastic with metric threaded cable entries. Light grey box with dark grey cover and operating handle. Delivery includes PE+neutral terminal and membrane glands (IP54) / sealing plugs. For IP65 degree of protection compression glands must be used.

Rated operational current [A] AC22A 400V	500V	690V	AC23A 500V	Cable sizes Up/Down	Enclosure size [mm] W	H	M	Type	Order number	Weight [kg]
16	16	10	10	2xM25/2xM25	111	130	60	BW316 TPN	2CMA142447R1000	0.31
25	25	16	16	2xM25/2xM25	111	130	60	BW325 TPN	2CMA142403R1000	0.31
25	25	16	16	2xM25/2xM25	111	130	60	BW325 W/TPN	2CMA142402R1000[1]	0.31
40	40	32	25	2xM32/ 2xM32+1xM16	138	168	68	BW340 TPN	2CMA142408R1000	0.41

[1] Light grey cover for commercial/residential design

BW325K/TPN
2CMC341011F0072

BW325L/TPN
2CMC341011F0073

3-pole side operated switch-disconnectors

Plastic enclosed, IP65

Enclosure in robust PBT plastic with metric threaded cable entries. Light grey enclosure with dark grey operating handle. Delivery includes PE+neutral terminal and membrane glands (IP54) / sealing plugs. For IP65 degree of protection compression glands must be used.

Rated operational current [A] AC22A 400V	500V	690V	AC23A 400V	Cable sizes Up/Down	Enclosure size [mm] W	H	M	Type	Order number	Weight [kg]
25	25	16	16	2xM25/2xM25	111	130	60	BW325 K/TPN	2CMA142443R1000	0.31
25			16	2xM25/2xM25	111	130	60	BW325 L/TPN	2CMA142404R1000[2]	0.33

[2] With indicator lamp

Ordering information
Plastic enclosed switch-disconnectors

BW425 TPSN
2CMC341011F0054

BW440 TPSN
2CMC341011F0056

4-pole side operated switch-disconnectors

Plastic enclosed, IP65

Enclosure in robust PBT plastic with metric threaded cable entries. Light grey enclosure with dark grey operating handle. Delivery includes PE terminal and membrane glands (IP54) / sealing plugs. For IP65 degree of protection compression glands must be used.

Rated operational current [A] AC22A 400V	500V	690V	AC23A 500V	Cable sizes Up/Down	Enclosure size [mm] W	H	M	Type	Order number	Weight [kg]
25	25	16	16	2xM25/2xM25	111	130	60	BW425 TPSN	2CMA142405R1000	0.31
40	40	32	25	2xM32/ 2xM32+1xM16	138	168	68	BW440 TPSN	2CMA142409R1000	0.33

BW625 TPN, BW640 TPN
2CMC341011F0066

6-pole side operated switch-disconnectors

Plastic enclosed, IP65

Enclosure in robust PBT plastic with non-threaded cable entries. Light grey box with dark grey cover and operating handle. Delivery includes PE+neutral terminal and membrane glands (IP54). For IP65 degree of protection compression glands (with prolonged thread) must be used.

Rated operational current [A] AC22A 400V	500V	690V	AC23A 500V	Cable sizes Up/Down	Enclosure size [mm] W	H	M	Type	Order number	Weight [kg]
25	25	16	16	2xØ25+1xØ16/ 2xØ25+1xØ16	190	130	65	BW625 TPN	2CMA142406R1000	0.31
40	40	32	25	2xØ25+1xØ16/ 2xØ25+1xØ16	190	130	65	BW640 TPN	2CMA142410R1000	0.41

Ordering information
Plastic enclosed switch-disconnectors

OTP16B_
S00695A

OTP25B_, OTP32B_
S00764A

OT45B_, OTP63B_
S00762A

OTP100...125B3M
S02081A

OTP100...125B3B
S00692A

OTP100...125B3U
S00772A

OT160...800_
S00835

3-pole front operated switch-disconnectors

Plastic enclosed, IP65

Rated operational current [A] AC22A ≤690V	AC23A ≤415V	Cable outlets/ side	Enclosure size [mm] W	H	D	Type	Order number	Weight [kg]
Includes black round handle (1-0 and ON-OFF indication), N- and PE-terminals, two membrane cable glands and two pull stoppers.								
16	16	2xM20	85	120	60	OTP16HB3M	1SCA022401R2970	0.4
16	16	2xM25	85	120	60	OTP16HB3M25	1SCA022699R3690	0.4
16	16	2xPg16	85	120	60	OTP16HB3P	1SCA022389R6700	0.4
16	16	-	85	120	60	OTP16HB3U	1SCA022401R3010	0.4
Includes selector-type black handle (1-0 and ON-OFF indication), N- and PE-terminals, two membrane cable glands and two pull stoppers.								
16	16	2xM20	85	120	60	OTP16B3M	1SCA022383R2130	0.4
16	16	2xM25	85	120	60	OTP16B3M25	1SCA022699R2880	0.4
16	16	2xPg16	85	120	60	OTP16B3P	1SCA022383R0940	0.4
Includes selector-type black handle (1-0 and ON-OFF indication), N- and PE-terminals. Threaded knock-outs, compression glands have to be ordered separately.								
25	20	2xM25+M16	130	150	60	OTP25B3M	1SCA022383R2640	0.5
25	20	2xPg21+Pg11	130	150	60	OTP25B3P	1SCA022383R2560	0.5
40	23	2xM25+M16	130	150	60	OTP32B3M	1SCA022389R8400	0.8
40	23	2xPg21+Pg11	130	150	60	OTP32B3P	1SCA022389R7510	0.8
63	45	2xM32+M16	145	200	90	OTP45B3M	1SCA022383R3020	1.0
63	45	2xPg29+Pg11	145	200	90	OTP45B3P	1SCA022383R2990	1.0
80	75	2xM32+M16	145	200	90	OTP63B3M	1SCA022383R3450	1.0
80	75	2xPg29+Pg11	145	200	90	OTP63B3P	1SCA022383R3370	1.0
100	80	2xM50+M16	200	400	140	OTP100B3M	1SCA126054R1001	2.4
125	90	2xM50+M16	200	400	140	OTP125B3M	1SCA022812R7180	2.4
Includes selector-type black handle (1-0 and ON-OFF indication), N- and PE-terminals. Knock-out flanges, flanges have to be ordered separately.								
100	80	I-flange	200	400	140	OTP100B3B	1SCA126055R1001	2.4
100	80	-	200	400	140	OTP100B3U	1SCA126056R1001	2.4
125	90	I-flange	200	400	140	OTP125B3B	1SCA022383R3700	2.4
125	90	-	200	400	140	OTP125B3U	1SCA022401R3270	2.4
Includes pistol-type black handle (1-0 and ON-OFF indication), N- and PE-terminals. Knock-out flanges, flanges have to be ordered separately.								
160	135	II-flange	280	380	130	OT160EFCC3B	1SCA022278R7030	5.4
200	200	II-flange	280	560	180	OT200KFCC3B	1SCA022278R1510	9.0
250	250	II-flange	280	560	180	OT250KFCC3B	1SCA022278R2150	9.0
315	315	II-flange	380	560	180	OT315KFCC3B	1SCA022278R2740	9.0
400	400	II-flange	380	840	180	OT400DFCC3B	1SCA022278R3390	16.0
570	570	II-flange	380	840	180	OT630KFCC3B	1SCA022278R3980	20.0
720	720	2xII-flange	560	760	250	OT800KFCC3B	1SCA022303R0310	20.0

Ordering information
Plastic enclosed switch-disconnectors

OTP16B_, OTP25B_, OTP32B_
S00764A

OT45B_, OTP63B_
S00762A

OTP125B4M
S02081A

OTP125B4B
S00692A

OTP125B4U
S00772A

OT160...800_
S00835A

4-pole front operated switch-disconnectors

Plastic enclosed, IP65

Rated operational current [A] AC22A ≤690V	AC23A ≤415V	Cable outlets/ side	Enclosure size [mm] W	H	D	Type	Order number	Weight [kg]
Includes selector-type black handle (I-0 and ON-OFF indication), N- and PE-terminals.								
Threaded knock-outs, compression glands have to be ordered separately.								
16	16	2xM25+M16	130	150	60	OTP16B4M	1SCA022401R4160	0.5
16	16	2xPg21+Pg11	130	150	60	OTP16B4P	1SCA022419R8620	0.5
25	20	2xM25+M16	130	150	60	OTP25B4M	1SCA022401R4320	0.8
25	20	2xPg21+Pg11	130	150	60	OTP25B4P	1SCA022401R4240	0.8
40	23	2xM25+M16	130	150	60	OTP32B4M	1SCA022401R4590	0.8
40	23	2xPg21+Pg11	130	150	60	OTP32B4P	1SCA022401R4410	0.8
63	45	2xM32+M16	145	200	90	OTP45B4M	1SCA022401R4750	1.0
63	45	2xPg29+Pg11	145	200	90	OTP45B4P	1SCA022401R4670	1.0
80	75	2xM32+M16	145	200	90	OTP63B4M	1SCA022401R4910	1.0
80	75	2xPg29+Pg11	145	200	90	OTP63B4P	1SCA022401R4830	1.0
125	90	2xM50+M16	200	400	140	OTP125B4M	1SCA022812R7260	2.5
Includes selector-type black handle (I-0 and ON-OFF indication), N- and PE-terminals.								
Knock-out flanges, flanges have to be ordered separately.								
125	90	I-flange	200	400	140	OTP125B4B	1SCA022401R5210	2.5
125	90	-	200	400	140	OTP125B4U	1SCA022401R5300	2.5
Includes pistol-type black handle (O-I and ON-OFF indication), N- and PE-terminals.								
Knock-out flanges, flanges have to be ordered separately.								
160	135	II-flange	280	380	130	OT160EFCC4B	1SCA022548R6620	5.4
200	200	II-flange	280	560	180	OT200KFCC4B	1SCA022530R4450	9.0
250	250	II-flange	280	560	180	OT250KFCC4B	1SCA022530R4530	9.0
315	315	II-flange	380	560	180	OT315KFCC4B	1SCA022548R6710	9.0
400	400	II-flange	380	840	180	OT400DFCC4B	1SCA022609R5480	16.0
570	570	II-flange	380	840	180	OT630KFCC4B	1SCA022584R5700	20.0
720	720	2xII-flange	560	760	250	OT800KFCC4B	1SCA022609R5560	20.0

Ordering information
Plastic enclosed switch-disconnectors

OTP16B_, OTP25B_, OTP32B_
S00764A

OTP45B_, OTP63B_
S00560A

OTP125B6M
S02084A

OTP125B6B
S00768A

OTP125B6U
S00774A

6-pole front operated switch-disconnectors

Plastic enclosed, IP65

Rated operational current [A] AC22A ≤690V	AC23A ≤415V	Cable outlets/ side	Enclosure size [mm] W	H	D	Type	Order number	Weight [kg]
Includes selector-type black handle (1-0 and ON-OFF indication), N- and PE-terminals.								
Threaded knock-outs, compression glands have to be ordered separately.								
16	16	2xM25+M16	130	150	85	OTP16B6M	1SCA022401R5560	0.8
16	16	2xPg21+Pg11	130	150	85	OTP16B6P	1SCA022401R5480	0.8
25	20	2xM25+M16	130	150	85	OTP25B6M	1SCA022401R5720	0.9
25	20	2xPg21+Pg11	130	150	85	OTP25B6P	1SCA022401R5640	0.9
40	23	2xM25+M16	130	150	85	OTP32B6M	1SCA022401R5990	0.9
40	23	2xPg21+Pg11	130	150	85	OTP32B6P	1SCA022401R5810	0.9
Includes pistol-type black handle (I-0 and ON-OFF indication), N- and PE-terminals.								
Threaded knock-outs, compression glands have to be ordered separately.								
45	45	2xM32+M16	145	200	90	OTP45B6M	1SCA022401R6110	1.6
45	45	2xPg29+Pg11	145	200	90	OTP45B6P	1SCA022401R6020	1.6
63	45	2xM32+M16	145	200	90	OTP63B6M	1SCA022401R6370	1.6
63	45	2xPg29+Pg11	145	200	90	OTP63B6P	1SCA022401R6290	1.6
125	90	2xM50+M16	200	400	140	OTP125B6M	1SCA022812R7340	3.2
Includes pistol-type black handle (I-0 and ON-OFF indication), N- and PE-terminals.								
Knock-out flanges, flanges have to be ordered separately.								
125	90	I-flange	200	400	140	OTP125B6B	1SCA022401R6610	3.2
125	90	-	200	400	140	OTP125B6U	1SCA022401R6700	3.2

Ordering information
Plastic enclosed switch-disconnectors

BW_25Y/TPN
2CMC342002F0056

BW_40Y/TPSN
2CMC342002F0056

3-pole side operated switch-disconnectors

Plastic enclosed, IP65, red-yellow

Enclosure in robust PBT plastic with metric threaded cable entries. Light grey box with yellow cover and red operating handle. Delivery includes PE+neutral terminal and membrane glands (IP54) / sealing plugs. For IP65 degree of protection compression glands must be used.

Rated operational current [A] AC22A 400V	500V	690V	AC23A 500V	Cable sizes Up/Down	Enclosure size [mm] W	H	D	Type	Order number	Weight [kg]
25	25	16	16	2xM25/2xM25	111	130	60	BW325 Y/TPN	2CMA142441R1000	0.31
40	40	32	25	2xM32/ 2xM32+1xM16	138	168	68	BW340 Y/TPN	2CMA142445R1000	0.41

4-pole side operated switch-disconnectors

Plastic enclosed, IP65, red-yellow

Enclosure in robust PBT plastic with metric threaded cable entries. Light grey box with yellow cover and red operating handle. Delivery includes PE terminal and membrane glands (IP54) / sealing plugs. For IP65 degree of protection compression glands must be used.

Rated operational current [A] AC22A 400V	500V	690V	AC23A 500V	Cable sizes Up/Down	Enclosure size [mm] W	H	D	Type	Order number	Weight [kg]
25	25	16	16	2xM25/2xM25	111	130	60	BW425 Y/TPSN	2CMA142444R1000	0.31
40	40	32	25	2xM32/ 2xM32+1xM16	138	168	68	BW440 Y/TPSN	2CMA142446R1000	0.41

Ordering information
Plastic enclosed switch-disconnectors

OTP16B_
S00759A

OTP25B_, OTP32B_
S00760A

OTP45B_, OTP63B_
S00761A

OTP100...125BA3M
S02076A

OTP100...125BA3B
S00763A

OTP100...125BA3U
S00773A

OT160...800_
S01765A

3-pole front operated switch-disconnectors

Plastic enclosed, IP65, red-yellow

Rated operational current [A] AC22A ≤690V	AC23A ≤415V	Cable outlets/ side	Enclosure size [mm] W	H	D	Type	Order number	Weight [kg]
Includes selector-type red-yellow handle (I-0 and ON-OFF indication), N- and PE-terminals, two membrane cable glands and two pull stoppers.								
16	16	2xM20	85	120	60	OTP16BA3M	1SCA022401R3350	0.4
16	16	2xM25	85	120	60	OTP16BA3M25	1SCA022699R2960	0.4
16	16	2xPg16	85	120	60	OTP16BA3P	1SCA022389R6880	0.4
Includes selector-type red-yellow handle (I-0 and ON-OFF indication), N- and PE-terminals. Threaded knock-outs, compression glands have to be ordered separately.								
25	20	2xM25+M16	130	150	60	OTP25BA3M	1SCA022401R3430	0.5
25	20	2xPg21+Pg11	130	150	60	OTP25BA3P	1SCA022389R6960	0.5
40	23	2xM25+M16	130	150	60	OTP32BA3M	1SCA022401R3510	0.8
40	23	2xPg21+Pg11	130	150	60	OTP32BA3P	1SCA022389R7000	0.8
63	45	2xM32+M16	145	200	90	OTP45BA3M	1SCA022401R3600	1.0
63	45	2xPg29+Pg11	145	200	90	OTP45BA3P	1SCA022389R7180	1.0
80	75	2xM32+M16	145	200	90	OTP63BA3M	1SCA022401R3780	1.0
80	75	2xPg29+Pg11	145	200	90	OTP63BA3P	1SCA022389R7260	1.0
100	80	2xM50+M16	200	400	140	OTP100BA3M	1SCA126069R1001	2.4
125	90	2xM50+M16	200	400	140	OTP125BA3M	1SCA022812R7420	2.4
Includes selector-type red-yellow handle (I-0 and ON-OFF indication), N- and PE-terminals. Knock-out flanges, flanges have to be ordered separately.								
100	80	I-flange	200	400	140	OTP100BA3B	1SCA126067R1001	2.4
100	80	-	200	400	140	OTP100BA3U	1SCA126057R1001	2.4
125	90	I-flange	200	400	140	OTP125BA3B	1SCA022389R7420	2.4
125	90	-	200	400	140	OTP125BA3U	1SCA022401R3940	2.4
Includes pistol-type red-yellow handle (I-0 and ON-OFF indication), N- and PE-terminals. Knock-out flanges, flanges have to be ordered separately.								
160	135	II-flange	280	380	130	OT160EFCC3BA	1SCA022833R6510	5.4
200	200	II-flange	280	560	180	OT200KFCC3BA	1SCA022833R9950	9.0
250	250	II-flange	280	560	180	OT250KFCC3BA	1SCA022834R0020	9.0
315	315	II-flange	380	560	180	OT315KFCC3BA	1SCA022834R0110	9.0
400	400	II-flange	380	840	180	OT400DFCC3BA	1SCA022834R0290	16.0
570	570	II-flange	380	840	180	OT630KFCC3BA	1SCA022834R0370	20.0
720	720	2xII-flange	560	760	250	OT800KFCC3BA	1SCA022834R0450	30.0

Ordering information
Plastic enclosed switch-disconnectors

OTP16B_, OTP25B_, OTP32B_
S00760A

OTP45_, OTP63_
S00761A

OTP125BA4M
S02076A

OTP125BA4B
S00763A

OTP125BA4U
S00773A

OT160_...800_
S01765A

4-pole front operated switch-disconnectors

Plastic enclosed, IP65, red-yellow

Rated operational current [A] AC22A ≤690V	AC23A ≤415V	Cable outlets/ side	Enclosure size [mm] W	H	D	Type	Order number	Weight [kg]
Includes selector-type red-yellow handle (I-0 and ON-OFF indication), N- and PE-terminals.								
Threaded knock-outs, compression glands have to be ordered separately.								
16	16	2xM25+M16	130	150	60	OTP16BA4M	1SCA022459R6510	0.5
16	16	2xPg21+Pg11	130	150	60	OTP16BA4P	1SCA022401R4080	0.5
25	20	2xM25+M16	130	150	60	OTP25BA4M	1SCA022459R6600	0.8
25	20	2xPg21+Pg11	130	150	60	OTP25BA4P	1SCA022433R8140	0.8
40	23	2xM25+M16	130	150	60	OTP32BA4M	1SCA022459R6780	0.8
40	23	2xPg21+Pg11	130	150	60	OTP32BA4P	1SCA022433R8220	0.8
63	45	2xM32+M16	145	200	90	OTP45BA4M	1SCA022459R6860	1.0
63	45	2xPg29+Pg11	145	200	90	OTP45BA4P	1SCA022571R5080	1.0
80	75	2xM32+M16	145	200	90	OTP63BA4M	1SCA022459R6940	1.0
80	75	2xPg29+Pg11	145	200	90	OTP63BA4P	1SCA022571R5160	1.0
125	90	2xM50+M16	200	400	140	OTP125BA4M	1SCA022812R7510	2.5
Includes selector-type red-yellow handle (I-0 and ON-OFF indication), N- and PE-terminals.								
Knock-out flanges, flanges have to be ordered separately.								
125	90	I-flange	200	400	140	OTP125BA4B	1SCA022571R8510	2.5
125	90	-	200	400	140	OTP125BA4U	1SCA022459R7160	2.5
Includes pistol-type red-yellow handle (I-0 and ON-OFF indication), N- and PE-terminals.								
Knock-out flanges, flanges have to be ordered separately.								
160	135	II-flange	280	380	130	OT160EFCC4BA	1SCA022833R6690	5.4
200	200	II-flange	280	560	180	OT200KFCC4BA	1SCA022834R0530	9.0
250	250	II-flange	280	560	180	OT250KFCC4BA	1SCA022834R0610	9.0
315	315	II-flange	380	560	180	OT315KFCC4BA	1SCA022834R0700	9.0
400	400	II-flange	380	840	180	OT400DFCC4BA	1SCA022834R0880	16.0
570	570	II-flange	380	840	180	OT630KFCC4BA	1SCA022834R1000	20.0
720	720	2xII-flange	560	760	250	OT800KFCC4BA	1SCA022834R1180	30.0

Ordering information
Plastic enclosed switch-disconnectors

OTP16B_, OTP25B_, OTP32B_
S00760A

OTP45_, OTP63_
S00767A

OTP125BA6M
S02083A

OTP125BA6B
S00769A

OTP125BA6U
S00775A

6-pole front operated switch-disconnectors

Plastic enclosed, IP65, red-yellow

Rated operational current [A] AC22A ≤690V	AC23A ≤415V	Cable outlets/ side	Enclosure size [mm] W	H	D	Type	Order number	Weight [kg]
Includes selector-type red-yellow handle (I-0 and ON-OFF indication), N- and PE-terminals.								
Threaded knock-outs, compression glands have to be ordered separately.								
16	16	2xM25+M16	130	150	85	OTP16BA6M	1SCA022401R6880	0.8
16	16	2xPg21+Pg11	130	150	85	OTP16BA6P	1SCA022394R5330	0.8
25	20	2xM25+M16	130	150	85	OTP25BA6M	1SCA022401R6960	0.9
25	20	2xPg21+Pg11	130	150	85	OTP25BA6P	1SCA022394R5410	0.9
40	23	2xM25+M16	130	150	85	OTP32BA6M	1SCA022401R7000	0.9
40	23	2xPg21+Pg11	130	150	85	OTP32BA6P	1SCA022394R5680	0.9
Includes pistol-type red-yellow handle (I-0 and ON-OFF indication), N- and PE-terminals.								
Threaded knock-outs, compression glands have to be ordered separately.								
45	45	2xM32+M16	145	200	90	OTP45BA6M	1SCA022401R7180	1.6
45	45	2xPg29+Pg11	145	200	90	OTP45BA6P	1SCA022394R5840	1.6
63	45	2xM32+M16	145	200	90	OTP63BA6M	1SCA022401R7260	1.6
63	45	2xPg29+Pg11	145	200	90	OTP63BA6P	1SCA022394R5760	1.6
125	90	2xM50+M16	200	400	140	OTP125BA6M	1SCA022812R7690	3.2
Includes pistol-type red-yellow handle (I-0 and ON-OFF indication), N- and PE-terminals.								
Knock-out flanges, flanges have to be ordered separately.								
125	90	I-flange	200	400	140	OTP125BA6B	1SCA022401R7510	3.2
125	90	-	200	400	140	OTP125BA6U	1SCA022401R7690	3.2

Ordering information
Plastic enclosed switch-disconnectors

OTDCP_SA_

OTDCP_S_

OTDCP_11_

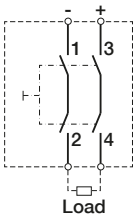

OTDCP_12_

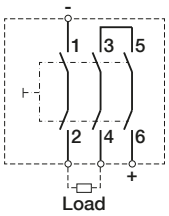

OTDCP_22_

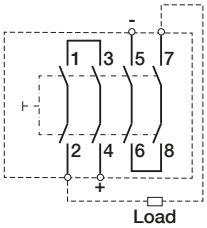

Front operated switch-disconnectors, DC rated switches

M20 threaded knock-outs, compression glands have to be ordered separately.
M16 threaded knock-outs available on request.

Up to 660 VDC

Number of poles	Rated operat. current [A] DC 21B / 660 V	Type	Order number	Weight/ unit [kg]
Includes selector type red-yellow handle (I-0 and ON-OFF indication)				
2	16	OTDCP16SA11M	1SCA125126R1001	0.55
2	25	OTDCP25SA11M	1SCA125127R1001	0.55
2	32	OTDCP32SA11M	1SCA125128R1001	0.55
Includes selector type black handle (I-0 and ON-OFF indication)				
2	16	OTDCP16S11M	1SCA125129R1001	0.55
2	25	OTDCP25S11M	1SCA125130R1001	0.55
2	32	OTDCP32S11M	1SCA125131R1001	0.55

Up to 1000 VDC

Number of poles	Rated operat. current [A] DC 21B / 1000 V	Type	Order number	Weight/ unit [kg]
Includes selector type red-yellow handle (I-0 and ON-OFF indication)				
3	16	OTDCP16SA12M	1SCA125150R1001	0.59
3	25	OTDCP25SA12M	1SCA125151R1001	0.59
3	32	OTDCP32SA12M	1SCA125152R1001	0.59
Includes selector type black handle (I-0 and ON-OFF indication)				
3	16	OTDCP16S12M	1SCA125153R1001	0.59
3	25	OTDCP25S12M	1SCA125154R1001	0.59
3	32	OTDCP32S12M	1SCA125155R1001	0.59

Up to 1000 VDC or 2x660 VDC[1)]

Number of poles	Rated operat. current [A] DC 21B / 1000 V	Type	Order number	Weight/ unit [kg]
Includes selector type red-yellow handle (I-0 and ON-OFF indication)				
4	16	OTDCP16SA22M	1SCA125094R1001	0.63
4	25	OTDCP25SA22M	1SCA125091R1001	0.63
4	32	OTDCP32SA22M	1SCA125090R1001	0.63
Includes selector type black handle (I-0 and ON-OFF indication)				
4	16	OTDCP16S22M	1SCA125095R1001	0.63
4	25	OTDCP25S22M	1SCA125092R1001	0.63
4	32	OTDCP32S22M	1SCA125093R1001	0.63

[1)] 1000 V with all poles in series, 660 V with 2 poles in series

Ordering information
Steel sheet enclosed switch-disconnectors

OT16...63 ELMM_
S00822A

OT125 ELBB_
S00823A

OTL16...63 B_
S01211A

OTL100...125B3B
S01251A

3-pole front operated switch-disconnectors

Steel sheet enclosed, IP65

Rated operational current [A] AC22A ≤690V	AC23A ≤415V	Cable outlets/ side	Enclosure size [mm] W	H	D	Type	Order number	Weight [kg]
Includes selector-type black handle (I-0 and ON-OFF indication), N- and PE-terminals.								
Cable knock-outs as standard, compression glands have to be ordered separately.								
16	16	2xø20+ø16	162	240	110	OT16ELMM3BZ	1SCA022461R9150	1.6
25	20	2xø25+ø16	162	240	110	OT25ELMM3BZ	1SCA022461R9310	1.6
40	23	2xø25+ø16	162	240	110	OT32ELMM3BZ	1SCA022461R9580	1.6
63	45	2xø32+ø16	162	240	110	OT45ELMM3BZ	1SCA022461R9740	2.0
80	75	2xø32+ø16	162	240	110	OT63ELMM3BZ	1SCA022461R9910	2.0
Includes selector-type black handle (I-0 and ON-OFF indication), N- and PE-terminals.								
Cable knock-outs as standard, flanges have to be ordered separately.								
125	90	B-flange	233	350	140	OT125ELBB3BZ	1SCA022462R0240	5.0
Includes selector-type black handle (I-0 and ON-OFF indication), N- and PE-terminals.								
Cable knock-outs as standard, compression glands have to be ordered separately.								
16	16	2xø25+ø16	150	200	100	OTL16B3M	1SCA022562R1260	1.7
25	20	2xø25+ø16	150	200	100	OTL25B3M	1SCA022562R2400	1.7
40	23	2xø25+ø16	150	200	100	OTL32B3M	1SCA022562R3630	1.7
63	45	2xø32+ø16	150	200	100	OTL45B3M	1SCA022562R4790	1.9
80	75	2xø32+ø16	150	200	100	OTL63B3M	1SCA022562R5920	1.9
Includes pistol-type black handle (I-0 and ON-OFF indication), N- and PE-terminals.								
Cable knock-outs as standard, flanges have to be ordered separately.								
100	80	B-flange	200	300	135	OTL100B3B	1SCA022562R8350	3.4
100	80	-	200	300	135	OTL100B3U	1SCA022562R8430	3.4
125	90	B-flange	200	300	135	OTL125B3B	1SCA022562R9590	3.4
125	90	-	200	300	135	OTL125B3U	1SCA022562R9670	3.4

Ordering information
Steel sheet enclosed switch-disconnectors

OT125...1600_ LA_
S00834A

OT125...1600_ LU_
S00507A

3-pole front operated switch-disconnectors

Steel sheet enclosed, IP65

Rated operational current [A] AC22A ≤690V	AC23A ≤415V	Cable outlets/ side	Enclosure size [mm] W	H	D	Type	Order number	Weight [kg]
Delivery without cable entries, top and bottom sides are open. Cable entries for C-flanges or for ring-flanges have to be ordered separately, see accessories. These entries are used also for fixing the enclosed switches. Flanges have to be ordered separately too. Includes pistol-type black handle (I-0 and ON-OFF indication), N- and PE-terminals.								
125	105	Open	250	400	180	OT125ALAA3BZ	1SCA022302R6710	11.0
160	135	Open	250	400	180	OT160ELAA3BZ	1SCA022302R7100	10.0
200	200	Open	400	600	230	OT200KLAA3BZ	1SCA022302R7520	17.0
250	250	Open	400	600	230	OT250KLAA3BZ	1SCA022302R7950	17.0
315	315	Open	400	600	230	OT315KLAA3BZ	1SCA022302R8330	17.0
400	400	Open	400	800	230	OT400DLAA3BZ	1SCA022302R8760	23.0
570	570	Open	400	1000	230	OT630KLAA3BZ	1SCA022302R9140	30.0
720	720	Open	400	1000	230	OT800KLAA3BZ	1SCA022302R9570	30.0
1000	1000	Open	800	1200	230	OT1000KLAA3BZ	1SCA022569R2870	73.0
1250	1250	Open	800	1200	330	OT1250KLAA3BZ	1SCA022569R4310	90.0
1600	1250	Open	800	1200	330	OT1600KLAA3BZ	1SCA022569R4570	92.0
Delivery with blank cable entries. These entries are used also for fixing the enclosed switches. Includes pistol-type black handle (I-0 and ON-OFF indication), N- and PE-terminals.								
125	90	-	250	400	180	OT125ALUU3BZ	1SCA022750R1430	11.0
160	135	-	250	400	180	OT160ELUU3BZ	1SCA022479R5120	15.0
200	200	-	400	600	230	OT200KLUU3BZ	1SCA022602R0630	17.0
250	250	-	400	600	230	OT250KLUU3BZ	1SCA022602R0710	17.0
315	315	-	400	600	230	OT315KLUU3BZ	1SCA022572R6010	20.0
400	400	-	400	800	230	OT400DLUU3BZ	1SCA022602R0800	24.0
570	570	-	400	1000	230	OT630KLUU3BZ	1SCA022750R1510	33.0
720	720	-	400	1000	230	OT800KLUU3BZ	1SCA022750R1600	33.0
1000	1000	-	800	1200	230	OT1000KLUU3BZ	1SCA022750R1780	75.0
1250	1250	-	800	1200	330	OT1250KLUU3BZ	1SCA022750R1860	92.0
1600	1250	-	800	1200	330	OT1600KLUU3BZ	1SCA022750R1940	94.0

Ordering information
Steel sheet enclosed switch-disconnectors

OT16...63_
S00822A

OT125_
S00823A

OTL16...63_
S01211A

OTL100...125B4B
S01251A

4-pole front operated switch-disconnectors

Steel sheet enclosed, IP65

Rated operational current [A] AC22A ≤690V	AC23A ≤415V	Cable outlets/ side	Enclosure size [mm] W	H	D	Type	Order number	Weight [kg]
Includes selector-type black handle (I-0 and ON-OFF indication), N- and PE-terminals.								
Cable knock-outs as standard, compression glands have to be ordered separately.								
16	16	2xø20+ø16	162	240	110	OT16ELMM4BZ	1SCA022467R9050	1.6
25	20	2xø25+ø16	162	240	110	OT25ELMM4BZ	1SCA022467R9210	1.6
40	23	2xø25+ø16	162	240	110	OT32ELMM4BZ	1SCA022467R9480	1.6
63	45	2xø32+ø16	162	240	110	OT45ELMM4BZ	1SCA022467R9640	2.0
80	63	2xø32+ø16	162	240	110	OT63ELMM4BZ	1SCA022467R9810	2.0
Includes selector-type black handle (I-0 and ON-OFF indication), N- and PE-terminals.								
Cable knock-outs as standard, flanges have to be ordered separately.								
125	90	B-flange	233	350	140	OT125ELBB4BZ	1SCA022468R0140	5.0
Includes selector-type black handle (I-0 and ON-OFF indication), N- and PE-terminals.								
Cable knock-outs as standard, compression glands have to be ordered separately.								
16	16	2xø25+ø16	150	200	100	OTL16B4M	1SCA022562R4120	1.7
25	20	2xø25+ø16	150	200	100	OTL25B4M	1SCA022562R2660	1.7
40	23	2xø25+ø16	150	200	100	OTL32B4M	1SCA022562R3800	1.7
63	45	2xø32+ø16	150	200	100	OTL45B4M	1SCA022562R4950	1.9
80	75	2xø32+ø16	150	200	100	OTL63B4M	1SCA022562R6140	1.9
Includes pistol-type black handle (I-0 and ON-OFF indication), N- and PE-terminals.								
Cable knock-outs as standard, flanges have to be ordered separately.								
100	80	B-flange	200	300	135	OTL100B4B	1SCA022562R8510	3.4
100	80	-	200	300	135	OTL100B4U	1SCA022562R8600	3.4
125	90	B-flange	200	300	135	OTL125B4B	1SCA022562R9830	3.4
125	90	-	200	300	135	OTL125B4U	1SCA022562R9910	3.4

Ordering information
Steel sheet enclosed switch-disconnectors

OT125...1600_LA_
S00834A

OT125...800_LU_
S00507A

4-pole front operated switch-disconnectors

Steel sheet enclosed, IP65

Rated operational current [A] AC22A ≤690V	AC23A ≤415V	Cable outlets/ side	Enclosure size [mm] W	H	D	Type	Order number	Weight [kg]
Delivery without cable entries, top and bottom sides are open. Cable entries for C-flanges or for ring-flanges have to be ordered separately, see accessories. These entries are used also for fixing the enclosed switches. Flanges have to be ordered separately too. Includes pistol-type black handle (I-0 and ON-OFF indication), N- and PE-terminals.								
125	90	Open	250	400	180	OT125ALAA4BZ	1SCA022342R4870	15.0
160	135	Open	250	400	180	OT160ELAA4BZ	1SCA022342R5090	15.0
200	200	Open	400	600	230	OT200KLAA4BZ	1SCA022342R5410	18.0
250	250	Open	400	600	230	OT250KLAA4BZ	1SCA022342R5840	18.0
315	315	Open	400	600	230	OT315KLAA4BZ	1SCA022342R6220	18.0
400	400	Open	400	800	230	OT400DLAA4BZ	1SCA022342R6650	24.0
570	570	Open	400	1000	230	OT630KLAA4BZ	1SCA022342R7030	31.0
720	720	Open	400	1000	230	OT800KLAA4BZ	1SCA022342R7460	31.0
1000	1000	Open	800	1200	230	OT1000KLAA4BZ	1SCA022569R4220	75.0
1250	1250	Open	800	1200	330	OT1250KLAA4BZ	1SCA022569R4490	92.0
1600	1250	Open	800	1200	330	OT1600KLAA4BZ	1SCA022569R4650	95.0
Delivery with blank cable entries. These entries are used also for fixing the enclosed switches. Includes pistol-type black handle (O-I and ON-OFF indication), N- and PE-terminals.								
125	90	-	250	400	180	OT125ALUU4BZ	1SCA022833R6770	12
160	135	-	250	400	180	OT160ELUU4BZ	1SCA022833R6850	15
200	200	-	400	600	230	OT200KLUU4BZ	1SCA022800R5740	17
250	250	-	400	600	230	OT250KLUU4BZ	1SCA022800R7360	17
315	315	-	400	600	230	OT315KLUU4BZ	1SCA022801R0070	20
400	400	-	400	800	230	OT400DLUU4BZ	1SCA022801R0660	24
570	570	-	400	1000	230	OT630KLUU4BZ	1SCA022830R4490	31
720	720	-	400	1000	230	OT800KLUU4BZ	1SCA022830R4570	31

Ordering information
Steel sheet enclosed switch-disconnectors

OT16...45_
S00823A

OTL16...63_
S01211A

OTL45...63B6B
S01251A

OT125...800_LA_
S00834A

OT125...800_LU_
S00507A

6-pole front operated switch-disconnectors

Steel sheet enclosed, IP65

Rated operational current [A] AC22A ≤690V	AC23A ≤415V	Cable outlets/ side	Enclosure size [mm] W	H	D	Type	Order number	Weight [kg]
Includes selector-type black handle (I-0 and ON-OFF indication), N- and PE-terminals.								
Cable knock-outs as standard, compression glands have to be ordered separately.								
16	16	2xø25+ø16	233	350	140	OT16ELMM6BZ	1SCA022589R9620	1.6
25	20	2xø25+ø16	233	350	140	OT25ELMM6BZ	1SCA022591R5330	1.6
40	23	2xø25+ø16	233	350	140	OT32ELMM6BZ	1SCA022589R8810	1.6
63	45	2xø32+ø16	233	350	140	OT45ELMM6BZ	1SCA022468R1380	2.0
Includes selector-type black handle (I-0 and ON-OFF indication), N- and PE-terminals.								
Cable knock-outs as standard, compression glands have to be ordered separately.								
16	16	2xø25+ø16	150	200	100	OTL16B6M	1SCA022562R1690	1.8
25	20	2xø25+ø16	150	200	100	OTL25B6M	1SCA022562R2820	1.8
40	23	2xø25+ø16	150	200	100	OTL32B6M	1SCA022562R4010	1.8
Includes pistol-type black handle (I-0 and ON-OFF indication), N- and PE-terminals.								
Cable knock-outs as standard, flanges have to be ordered separately.								
63	45	B-flange	200	300	135	OTL45B6B	1SCA022610R4730	3.5
63	45	-	200	300	135	OTL45B6U	1SCA022610R4810	3.5
80	75	B-flange	200	300	135	OTL63B6B	1SCA022610R4900	3.5
80	75	-	200	300	135	OTL63B6U	1SCA022610R5030	3.5
Delivery without cable entries, top and bottom sides are open. Cable entries for C-flanges or for ring-flanges have to be ordered separately, see accessories. These entries are used also for fixing the enclosed switches. Flanges have to be ordered separately too. Includes pistol-type black handle (I-0 and ON-OFF indication), N- and PE-terminals.								
125	90	Open	400	400	230	OT125ALAA6BZ	1SCA022689R5090	10
160	135	Open	400	400	230	OT160ELAA6BZ	1SCA022468R7400	10
200	200	Open	800	600	230	OT200KLAA6BZ	1SCA022717R9520	17
250	250	Open	800	800	230	OT250KLAA6BZ	1SCA022802R5770	34
315	315	Open	800	800	230	OT315KLAA6BZ	1SCA022804R1110	37
400	400	Open	800	800	230	OT400DLAA6BZ	1SCA022804R1200	37
570	570	Open	800	1000	230	OT630KLAA6BZ	1SCA022834R1420	46
720	720	Open	800	1000	230	OT800KLAA6BZ	1SCA022834R1340	46
Delivery with blank cable entries. These entries are used also for fixing the enclosed switches.								
Includes pistol-type black handle (I-0 and ON-OFF indication), N- and PE-terminals.								
125	90	-	400	400	230	OT125ALUU6BZ	1SCA022833R6930	15
160	135	-	400	400	230	OT160ELUU6BZ	1SCA022833R7070	15
200	200	-	800	600	230	OT200KLUU6BZ	1SCA022802R4610	35
250	250	-	800	800	230	OT250KLUU6BZ	1SCA022802R4530	40
315	315	-	800	800	230	OT315KLUU6BZ	1SCA022804R0900	43
400	400	-	800	800	230	OT400DLUU6BZ	1SCA022804R1030	43
570	570	-	800	1000	230	OT630KLUU6BZ	1SCA022834R1260	52
720	720	-	800	1000	230	OT800KLUU6BZ	1SCA022834R1690	52

Ordering information
Steel sheet enclosed switch-disconnectors

OT16...63_
S00822A

OT125_
S00823A

OT125...1600_
S00834A

3-pole front operated switch-disconnectors

Steel sheet enclosed, IP54

Rated operational current [A] AC22A ≤690V	AC23A ≤415V	Cable outlets/ side	Enclosure size [mm] W	H	D	Type	Order number	Weight [kg]
Includes selector-type black handle (I-0 and ON-OFF indication), N- and PE-terminals.								
Cable knock-outs as standard, compression glands have to be ordered separately.								
16	16	2xø20+ø16	162	240	110	OT16ELMM3B	1SCA022461R7960	1.6
25	20	2xø25+ø16	162	240	110	OT25ELMM3B	1SCA022461R8180	1.6
40	23	2xø25+ø16	162	240	110	OT32ELMM3B	1SCA022461R8340	1.6
63	45	2xø32+ø16	162	240	110	OT45ELMM3B	1SCA022461R8510	2.0
80	63	2xø32+ø16	162	240	110	OT63ELMM3B	1SCA022461R8770	2.0
Includes selector-type black handle (I-0 and ON-OFF indication), N- and PE-terminals.								
Cable knock-outs as standard, flanges have to be ordered separately.								
125	90	B-flange	233	350	140	OT125ELBB3B	1SCA022461R9070	5.0
Delivery without cable entries, top and bottom sides are open. Cable entries for C-flanges or for ring-flanges have to be ordered separately, see accessories. These entries are used also for fixing the enclosed switches. Flanges have to be ordered separately too. Includes pistol-type black handle (I-0 and ON-OFF indication), N- and PE-terminals.								
125	105	Open	250	400	180	OT125ALAA3B	1SCA022302R5910	10.0
160	135	Open	250	400	180	OT160ELAA3B	1SCA022280R3410	10.0
200	200	Open	400	600	230	OT200KLAA3B	1SCA022280R4060	17.0
250	250	Open	400	600	230	OT250KLAA3B	1SCA022280R4650	17.0
315	315	Open	400	600	230	OT315KLAA3B	1SCA022280R5200	17.0
400	400	Open	400	800	230	OT400DLAA3B	1SCA022279R9710	23.0
570	570	Open	400	1000	230	OT630KLAA3B	1SCA022280R0310	30.0
720	720	Open	400	1000	230	OT800KLAA3B	1SCA022280R0910	30.0
1000	1000	Open	800	1200	230	OT1000KLAA3B	1SCA022370R3830	73.0
1250	1250	Open	800	1200	230	OT1250KLAA3B	1SCA022350R0640	90.0
1600	1250	Open	800	1200	230	OT1600KLAA3B	1SCA022437R8520	92.0

Ordering information
Steel sheet enclosed switch-disconnectors

OT16...63_
S00822A

OT125_
S00823A

OT125...1600_
S00834A

4-pole front operated switch-disconnectors

Steel sheet enclosed, IP54

Rated operational current [A] AC22A ≤690V	AC23A ≤415V	Cable outlets/ side	Enclosure size [mm] W	H	D	Type	Order number	Weight [kg]
Includes selector-type black handle (I-0 and ON-OFF indication), N- and PE-terminals.								
Cable knock-outs as standard, compression glands have to be ordered separately.								
16	16	2xø20+ø16	162	240	110	OT16ELMM4B	1SCA022467R7940	1.6
25	20	2xø25+ø16	162	240	110	OT25ELMM4B	1SCA022467R8160	1.6
40	23	2xø25+ø16	162	240	110	OT32ELMM4B	1SCA022467R8320	1.6
63	45	2xø32+ø16	162	240	110	OT45ELMM4B	1SCA022467R8590	2.0
80	63	2xø32+ø16	162	240	110	OT63ELMM4B	1SCA022467R7430	2.0
Includes selector-type black handle (I-0 and ON-OFF indication), N- and PE-terminals.								
Cable knock-outs as standard, flanges have to be ordered separately.								
125	90	B-flange	233	350	140	OT125ELBB4B	1SCA022467R8910	5.0
Delivery without cable entries, top and bottom sides are open. Cable entries for C-flanges or for ring-flanges have to be ordered separately, see accessories. These entries are used also for fixing the enclosed switches. Flanges have to be ordered separately too. Includes pistol-type black handle (I-0 and ON-OFF indication), N- and PE-terminals.								
125	90	Open	250	400	180	OT125ALAA4B	1SCA022340R9560	10.0
160	135	Open	250	400	180	OT160ELAA4B	1SCA022340R9720	10.0
200	200	Open	400	600	230	OT200KLAA4B	1SCA022341R0140	17.0
250	250	Open	400	600	230	OT250KLAA4B	1SCA022341R0570	17.0
315	315	Open	400	600	230	OT315KLAA4B	1SCA022341R0900	17.0
400	400	Open	400	800	230	OT400DLAA4B	1SCA022341R1380	23.0
570	570	Open	400	1000	230	OT630KLAA4B	1SCA022341R1710	30.0
720	720	Open	400	1000	230	OT800KLAA4B	1SCA022337R4830	30.0
1000	1000	Open	800	1200	230	OT1000KLAA4B	1SCA022437R9760	73.0
1250	1250	Open	800	1200	330	OT1250KLAA4B	1SCA022437R9480	90.0
1600	1250	Open	800	1200	330	OT1600KLAA4B	1SCA022437R9920	92.0

Ordering information
Steel sheet enclosed switch-disconnectors

OTL16_...63_
S01345A

OTL100BA3B, OTL125BA3B
S01347A

OTL16_...63_
S01345A

OTL100BA4B, OTL125BA4B
S01347A

3-pole front operated switch-disconnectors

Steel sheet enclosed, IP65, red-yellow

Rated operational current [A] AC22A ≤690V	AC23A ≤415V	Cable outlets/ side	Enclosure size [mm] W	H	D	Type	Order number	Weight [kg]
Includes selector-type red-yellow handle (I-0 and ON-OFF indication), N- and PE-terminals.								
Cable knock-outs as standard, compression glands have to be ordered separately.								
16	16	2xø25+ø16	150	200	100	OTL16BA3M	1SCA022562R1850	1.7
25	20	2xø25+ø16	150	200	100	OTL25BA3M	1SCA022562R3040	1.7
40	23	2xø25+ø16	150	200	100	OTL32BA3M	1SCA022562R4100	1.7
63	45	2xø32+ø16	150	200	100	OTL45BA3M	1SCA022562R5330	1.9
80	75	2xø32+ø16	150	200	100	OTL63BA3M	1SCA022562R6570	1.9
Includes pistol-type red-yellow handle (I-0 and ON-OFF indication), N- and PE-terminals.								
Cable knock-outs as standard, flanges have to be ordered separately.								
100	80	B-flange	200	300	135	OTL100BA3B	1SCA022562R8940	3.4
100	80	-	200	300	135	OTL100BA3U	1SCA022562R9080	3.4
125	90	B-flange	200	300	135	OTL125BA3B	1SCA022563R0250	3.4
125	90	-	200	300	135	OTL125BA3U	1SCA022563R0330	3.4

4-pole front operated switch-disconnectors

Steel sheet enclosed, IP65, red-yellow

Rated operational current [A] AC22A ≤690V	AC23A ≤415V	Cable outlets/ side	Enclosure size [mm] W	H	D	Type	Order number	Weight [kg]
Includes selector-type red-yellow handle (I-0 and ON-OFF indication), N- and PE-terminals.								
Cable knock-outs as standard, compression glands have to be ordered separately.								
16	16	2xø25+ø16	150	200	100	OTL16BA4M	1SCA022562R2070	1.7
25	20	2xø25+ø16	150	200	100	OTL25BA4M	1SCA022562R3210	1.7
40	23	2xø25+ø16	150	200	100	OTL32BA4M	1SCA022562R4360	1.7
63	45	2xø32+ø16	150	200	100	OTL45BA4M	1SCA022562R5500	1.9
80	75	2xø32+ø16	150	200	100	OTL63BA4M	1SCA022562R6730	1.9
Includes pistol-type red-yellow handle (I-0 and ON-OFF indication), N- and PE-terminals.								
Cable knock-outs as standard, flanges have to be ordered separately.								
100	80	B-flange	200	300	135	OTL100BA4B	1SCA022562R9160	3.4
100	80	-	200	300	135	OTL100BA4U	1SCA022562R9240	3.4
125	90	B-flange	200	300	135	OTL125BA4B	1SCA022563R0410	3.4
125	90	-	200	300	135	OTL125BA4U	1SCA022563R0500	3.4

Ordering information
Steel sheet enclosed switch-disconnectors

OTL16_...32_
S01345A

OTL45BA6B, OTL63BA6B
S01347A

6-pole front operated switch-disconnectors

Steel sheet enclosed, IP65, red-yellow

Rated operational current [A] AC22A ≤690V	AC23A ≤415V	Cable outlets/ side	Enclosure size [mm] W	H	D	Type	Order number	Weight [kg]
Includes selector-type red-yellow handle (I-0 and ON-OFF indication), N- and PE-terminals.								
Cable knock-outs as standard, compression glands have to be ordered separately.								
16	16	2xø25+ø16	150	200	100	OTL16BA6M	1SCA022562R2230	1.8
25	20	2xø25+ø16	150	200	100	OTL25BA6M	1SCA022562R3470	1.8
40	23	2xø25+ø16	150	200	100	OTL32BA6M	1SCA022562R4520	1.8
Includes pistol-type red-yellow handle (I-0 and ON-OFF indication), N- and PE-terminals.								
Cable knock-outs as standard, flanges have to be ordered separately.								
63	45	B-flange	200	300	135	OTL45BA6B	1SCA022610R5110	3.5
63	45	-	200	300	135	OTL45BA6U	1SCA022610R5200	3.5
80	63	B-flange	200	300	135	OTL63BA6B	1SCA022610R5380	3.5
80	63	-	200	300	135	OTL63BA6U	1SCA022610R5460	3.5

Ordering information
Stainless steel sheet enclosed switch-disconnectors

OTR16...63B3M
S07207

OTR100...125B3B
S07209

OTR16...63B4M
S07207

OTR100...125B4B
S07209

3-pole front operated switch-disconnectors

Stainless steel sheet enclosed, IP65

Rated operational current [A] AC22A ≤690V	AC23A ≤415V	Cable outlets/ side	Enclosure size [mm] W	H	D	Type	Order number	Weight [kg]
Includes selector-type black handle (I-0 and ON-OFF indication), N- and PE-terminals.								
Cable knock-outs as standard, compression glands have to be ordered separately.								
16	16	2xø25+ø16	150	200	100	OTR16B3M	1SCA022567R9420	1.7
25	20	2xø25+ø16	150	200	100	OTR25B3M	1SCA022567R9690	1.7
40	23	2xø25+ø16	150	200	100	OTR32B3M	1SCA022567R9850	1.7
63	45	2xø32+ø16	150	200	100	OTR45B3M	1SCA022567R0010	1.9
80	75	2xø32+ø16	150	200	100	OTR63B3M	1SCA022567R0270	1.9
Includes pistol-type black handle (I-0 and ON-OFF indication), N- and PE-terminals.								
Cable knock-outs as standard, flanges have to be ordered separately.								
100	80	B-flange	200	300	135	OTR100B3B	1SCA022568R0510	3.4
100	80	-	200	300	135	OTR100B3U	1SCA022568R0600	3.4
125	90	B-flange	200	300	135	OTR125B3B	1SCA022568R0780	3.4
125	90	-	200	300	135	OTR125B3U	1SCA022568R0860	3.4

4-pole front operated switch-disconnectors

Stainless steel sheet enclosed, IP65

Rated operational current [A] AC22A ≤690V	AC23A ≤415V	Cable outlets/ side	Enclosure size [mm] W	H	D	Type	Order number	Weight [kg]
Includes selector-type black handle (I-0 and ON-OFF indication), N- and PE-terminals.								
Cable knock-outs as standard, compression glands have to be ordered separately.								
16	16	2xø25+ø16	150	200	100	OTR16B4M	1SCA022568R1080	1.7
25	20	2xø25+ø16	150	200	100	OTR25B4M	1SCA022568R1240	1.7
40	23	2xø25+ø16	150	200	100	OTR32B4M	1SCA022568R1410	1.7
63	45	2xø32+ø16	150	200	100	OTR45B4M	1SCA022568R1670	1.9
80	75	2xø32+ø16	150	200	100	OTR63B4M	1SCA022568R1830	1.9
Includes pistol-type black handle (I-0 and ON-OFF indication), N- and PE-terminals.								
Cable knock-outs as standard, flanges have to be ordered separately.								
100	80	B-flange	200	300	135	OTR100B4B	1SCA022568R2130	3.4
100	80	-	200	300	135	OTR100B4U	1SCA022568R2210	3.4
125	90	B-flange	200	300	135	OTR125B4B	1SCA022568R2300	3.4
125	90	-	200	300	135	OTR125B4U	1SCA022568R2480	3.4

Ordering information
Stainless steel sheet enclosed switch-disconnectors

OTR16...32B6M
S07207

OTR45...63B6B
S07209

6-pole front operated switch-disconnectors

Stainless steel sheet enclosed, IP65

Rated operational current [A] AC22A ≤690V	AC23A ≤415V	Cable outlets/ side	Enclosure size [mm] W	H	D	Type	Order number	Weight [kg]
Includes selector-type black handle (I-0 and ON-OFF indication), N- and PE-terminals.								
Cable knock-outs as standard, compression glands have to be ordered separately.								
16	16	2xø25+ø16	150	200	100	OTR16B6M	1SCA022575R2440	1.8
25	20	2xø25+ø16	150	200	100	OTR25B6M	1SCA022575R2870	1.8
40	23	2xø25+ø16	150	200	100	OTR32B6M	1SCA022575R3250	1.8
Includes pistol-type black handle (I-0 and ON-OFF indication), N- and PE-terminals.								
Cable knock-outs as standard, flanges have to be ordered separately.								
63	45	B-flange	200	300	135	OTR45B6B	1SCA022611R6660	3.5
63	45	-	200	300	135	OTR45B6U	1SCA022611R6820	3.5
80	63	B-flange	200	300	135	OTR63B6B	1SCA022611R7120	3.5
80	63	-	200	300	135	OTR63B6U	1SCA022611R7210	3.5

Ordering information
Stainless steel sheet enclosed switch-disconnectors

OTR16_...63_
S07211

OTR100BA3B, OTR125BA3B
S07213

3-pole front operated switch-disconnectors

Stainless steel sheet enclosed, IP65, red-yellow

Rated operational current [A] AC22A ≤690V	AC23A ≤415V	Cable outlets/ side	Enclosure size [mm] W	H	D	Type	Order number	Weight [kg]
Includes selector-type red-yellow handle (I-0 and ON-OFF indication), N- and PE-terminals.								
Cable knock-outs as standard, compression glands have to be ordered separately.								
16	16	2xø25+ø16	150	200	100	OTR16BA3M	1SCA022569R5110	1.7
25	20	2xø25+ø16	150	200	100	OTR25BA3M	1SCA022569R5540	1.7
40	23	2xø25+ø16	150	200	100	OTR32BA3M	1SCA022569R5970	1.7
63	45	2xø32+ø16	150	200	100	OTR45BA3M	1SCA022569R6350	1.9
80	75	2xø32+ø16	150	200	100	OTR63BA3M	1SCA022569R6780	1.9
Includes pistol-type red-yellow handle (I-0 and ON-OFF indication), N- and PE-terminals.								
Cable knock-outs as standard, flanges have to be ordered separately.								
100	80	B-flange	200	300	135	OTR100BA3B	1SCA022569R7320	3.4
100	80	-	200	300	135	OTR100BA3U	1SCA022569R7590	3.4
125	90	B-flange	200	300	135	OTR125BA3B	1SCA022569R7750	3.4
125	90	-	200	300	135	OTR125BA3U	1SCA022569R7910	3.4

OTR16_...63_
S07211

OTR100BA4B, OTR125BA4B
S07213

4-pole front operated switch-disconnectors

Stainless steel sheet enclosed, IP65, red-yellow

Rated operational current [A] AC22A ≤690V	AC23A ≤415V	Cable outlets/ side	Enclosure size [mm] W	H	D	Type	Order number	Weight [kg]
Includes selector-type red-yellow handle (I-0 and ON-OFF indication), N- and PE-terminals.								
Cable knock-outs as standard, compression glands have to be ordered separately.								
16	16	2xø25+ø16	150	200	100	OTR16BA4M	1SCA022569R5200	1.7
25	20	2xø25+ø16	150	200	100	OTR25BA4M	1SCA022569R5620	1.7
40	23	2xø25+ø16	150	200	100	OTR32BA4M	1SCA022569R6010	1.7
63	45	2xø32+ø16	150	200	100	OTR45BA4M	1SCA022569R6430	1.9
80	75	2xø32+ø16	150	200	100	OTR63BA4M	1SCA022569R6860	1.9
Includes pistol-type red-yellow handle (I-0 and ON-OFF indication), N- and PE-terminals.								
Cable knock-outs as standard, flanges have to be ordered separately.								
100	80	B-flange	200	300	135	OTR100BA4B	1SCA022569R7410	3.4
100	80	-	200	300	135	OTR100BA4U	1SCA022569R7670	3.4
125	90	B-flange	200	300	135	OTR125BA4B	1SCA022569R7830	3.4
125	90	-	200	300	135	OTR125BA4U	1SCA022569R8050	3.4

Ordering information
Stainless steel sheet enclosed switch-disconnectors

OTR16_...32_
S07211

OTR45BA6B, OTR63BA6B
S07213

6-pole front operated switch-disconnectors

Stainless steel sheet enclosed, IP65, red-yellow

Rated operational current [A] AC22A ≤690V	AC23A ≤415V	Cable outlets/ side	Enclosure size [mm] W	H	D	Type	Order number	Weight [kg]
Includes selector-type red-yellow handle (I-0 and ON-OFF indication), N- and PE-terminals.								
Cable knock-outs as standard, compression glands have to be ordered separately.								
16	16	2xø25+ø16	150	200	100	OTR16BA6M	1SCA022575R2610	1.8
25	20	2xø25+ø16	150	200	100	OTR25BA6M	1SCA022575R3090	1.8
40	23	2xø25+ø16	150	200	100	OTR32BA6M	1SCA022575R3410	1.8
Includes pistol-type red-yellow handle (I-0 and ON-OFF indication), N- and PE-terminals.								
Cable knock-outs as standard, flanges have to be ordered separately.								
63	45	B-flange	200	300	135	OTR45BA6B	1SCA022611R6910	3.5
63	45	-	200	300	135	OTR45BA6U	1SCA022611R7040	3.5
80	63	B-flange	200	300	135	OTR63BA6B	1SCA022611R7390	3.5
80	63	-	200	300	135	OTR63BA6U	1SCA022611R7470	3.5

Ordering information
Aluminum enclosed switch-disconnectors

KSE225 DP, KSE325 TPN, KSE425 TPSN
2CMC342002F0008

KSE240 DP, KSE340 TPN, KSE440 TPSN
2CMC342002F0010

2-pole side operated switch-disconnectors

Aluminum enclosed, IP65

Enclosure in Aluminum alloy (Silumin) with metric threaded cable entries and handle in PBT plastic. Light grey box with dark grey cover and operating handle. Delivery includes PE terminal and membrane glands (IP54) / sealing plugs. For IP65 degree of protection compression glands must be used.

Rated operational current [A] AC22A 230V	400V	AC23A 400V	Cable sizes Up/Down	Enclosure size [mm] W	H	D	Type	Order number	Weight [kg]
25	25	16	2xM25/2xM25	111	130	60	KSE225 DP	2CMA142411R1000	0.54
40	40	32	2xM32/ 2xM32+1xM16	138	168	68	KSE240 DP	2CMA142414R1000	0.78

3-pole side operated switch-disconnectors

Aluminum enclosed, IP65

Enclosure in Aluminum alloy (Silumin) with metric threaded cable entries and handle in PBT plastic. Light grey box with dark grey cover and operating handle. Delivery includes PE+neutral terminal and membrane glands (IP54) / sealing plugs. For IP65 degree of protection compression glands must be used.

Rated operational current [A] AC22A 400V	500V	690V	AC23A 500V	Cable sizes Up/Down	Enclosure size [mm] W	H	D	Type	Order number	Weight [kg]
25	25	16	16	2xM25/2xM25	111	130	60	KSE325 TPN	2CMA142412R1000	0.56
40	40	32	25	2xM32/ 2xM32+1xM16	138	168	68	KSE340 TPN	2CMA142415R1000	0.79

4-pole side operated switch-disconnectors

Aluminum enclosed, IP65

Enclosure in Aluminum alloy (Silumin) with metric threaded cable entries and handle in PBT plastic. Light grey box with dark grey cover and operating handle. Delivery includes PE terminal and membrane glands (IP54) / sealing plugs. For IP65 degree of protection compression glands must be used.

Rated operational current [A] AC22A 400V	500V	690V	AC23A 500V	Cable sizes Up/Down	Enclosure size [mm] W	H	D	Type	Order number	Weight [kg]
25	25	16	16	2xM25/2xM25	111	130	60	KSE425 TPSN	2CMA142413R1000	0.56
40	40	32	25	2xM32/ 2xM32+1xM16	138	168	68	KSE440 TPSN	2CMA142416R1000	0.8

Ordering information
Aluminum enclosed switch-disconnectors

KSE363 TPN, KSE380 TPN, KSE3125 TPN
2CMC341011F0075

KSE363D/TPN
2CMC341011F0075.r

KSE463 TPSN, KSE480 TPSN
2CMC341011F0075

3-pole front operated switch-disconnectors

Aluminum enclosed, IP65

Enclosure in Aluminum alloy (Silumin) with metric threaded cable entries. Light grey box with dark grey cover. Operating handle in black PBT plastic. Delivery includes PE+neutral terminal and membrane glands (IP54) / sealing plugs. For IP65 degree of protection compression glands must be used.

Rated operational current [A] AC22A 400V	500V	690V	AC23A 500V	Cable sizes Up/Down	Enclosure size [mm] W	H	D	Type	Order number	Weight [kg]
63	63	63	45	2xM40/ 2xM40+1xM16	160	230	145	KSE363 TPN	2CMA144580R1000	1.75
63	63	63	45	Closed/ 2xM40+1xM16	160	230	145	KSE363 D/TPN	2CMA144581R1000	1.76
80	80	80	58	2xM40/ 2xM40+1xM16	160	230	145	KSE380 TPN	2CMA144583R1000	1.75
125	125	125	70	2xM40/ 2xM40+1xM16	160	230	145	KSE3125 TPN	2CMA144588R1000	1.84

4-pole front operated switch-disconnectors

Aluminum enclosed, IP65

Enclosure in Aluminum alloy (Silumin) with metric threaded cable entries. Light grey box with dark grey cover. Operating handle in black PBT plastic. Delivery includes PE terminal and membrane glands (IP54) / sealing plugs. For IP65 degree of protection compression glands must be used.

Rated operational current [A] AC22A 400V	500V	690V	AC23A 500V	Cable sizes Up/Down	Enclosure size [mm] W	H	D	Type	Order number	Weight [kg]
63	63	63	45	2xM40/ 2xM40+1xM16	160	230	145	KSE463 TPSN	2CMA144582R1000	1.76
80	80	80	58	2xM40/ 2xM40+1xM16	160	230	145	KSE480 TPSN	2CMA144584R1000	1.75

Ordering information
Aluminum enclosed switch-disconnectors

KSE3160, 3250, 3315, 3500, 3630
2CMC341011F0023

3-pole front operated switch-disconnectors

Aluminum enclosed, IP65

White enclosure in Aluminum alloy (Silumin) with black plastic pistol handle.
Delivery includes PE and neutral terminals and rubber cable entry glands.

Rated operational current [A] AC22A 690V	AC23A 400V	Cable sizes Down	Enclosure size [mm] W	H	D	Type	Order number	Weight [kg]
160	125	2xØ18-48	400	405	234	KSE3160	2CMA144712R1000	9.9
250	250	4xØ30-68	465	555	322	KSE3250	2CMA144713R1000	23
315	315	4xØ30-68	465	555	322	KSE3315	2CMA144714R1000	23
500	400	4xØ30-68	565	655	322	KSE3500	2CMA144715R1000	36
630	630	4xØ30-68	565	655	322	KSE3630	2CMA144716R1000	37

Ordering information
Aluminum enclosed switch-disconnectors

KSF225 DP, KSF325 TPN, KSF425 TPSN
2CMC342002F0012

KSF340 TPN, KSF440 TPSN
2CMC342002F0013

2-pole side operated Fireman's switches

Aluminum enclosed, IP65, red

Red painted switch-disconnectors for use by firemen to disconnect in case of fire. Enclosure in Aluminum alloy (Silumin) with metric threaded cable entries and special operating handle with loop and interlocking mechanism. Delivery includes PE terminal and membrane glands (IP54) / sealing plugs. For IP65 degree of protection compression glands must be used.

Rated operational current [A] AC22A 230V	400V	AC23A 400V	Cable sizes Up/Down	Enclosure size [mm] W	H	D	Type	Order number	Weight [kg]
25	25	16	2xM25/2xM25	111	130	60	KSF225 DP	2CMA142435R1000	0.57

3-pole side operated Fireman's switches

Aluminum enclosed, IP65, red

Red painted switch-disconnectors for use by firemen to disconnect in case of fire. Enclosure in Aluminum alloy (Silumin) with metric threaded cable entries and special operating handle with loop and interlocking mechanism. Delivery includes PE+neutral terminal and membrane glands (IP54) / sealing plugs. For IP65 degree of protection compression glands must be used.

Rated operational current [A] AC22A 400V	500V	690V	AC23A 500V	Cable sizes Up/Down	Enclosure size [mm] W	H	D	Type	Order number	Weight [kg]
25	25	16	16	2xM25/2xM25	111	130	60	KSF325 TPN	2CMA142436R1000	0.59
25	25	16	16	2xM25/2xM25	111	130	60	KSF325 TPN NO	2CMA142442R1000	0.6
40	40	32	25	2xM32/ 2xM32+1xM16	138	168	68	KSF340 TPN	2CMA142438R1000	0.82

4-pole side operated Fireman's switches

Aluminum enclosed, IP65, red

Red painted switch-disconnectors for use by firemen to disconnect in case of fire. Enclosure in Aluminum alloy (Silumin) with metric threaded cable entries and special operating handle with loop and interlocking mechanism. Delivery includes PE terminal and membrane glands (IP54) / sealing plugs. For IP65 degree of protection compression glands must be used.

Rated operational current [A] AC22A 400V	500V	690V	AC23A 500V	Cable sizes Up/Down	Enclosure size [mm] W	H	D	Type	Order number	Weight [kg]
25	25	16	16	2xM25/2xM25	111	130	60	KSF425 TPSN	2CMA142437R1000	0.59
40	40	32	25	2xM32/ 2xM32+1xM16	138	168	68	KSF440 TPSN	2CMA142439R1000	0.83

Ordering information
Steel sheet enclosed change-over switches

OT16...63_C
S07227

OT125...800_3C
S00834A

OT125...800_4C
S00834A

3-pole front operated change-over switches

Steel sheet enclosed, IP54*

Rated operational current [A] AC22A ≤690V	AC23A ≤415V	Cable outlets/ side	Enclosure size [mm] W	H	D	Type	Order number	Weight [kg]
Includes pistol type black handle (I-O-II indication), N- and PE-terminals. Cable knock-outs as standard, compression glands and connection bars for parallel connection have to be ordered separately.								
16	16	2xø25+ø16	233	350	140	OT16ELMM3C	1SCA022473R1070	1.9
16	16	2xø28,3+ø18,6	233	350	140	OT16ELPP3C	1SCA022473R1310	1.9
25	20	2xø25+ø16	233	350	140	OT25ELMM3C	1SCA022473R1580	1.9
25	20	2xø28,3+ø18,6	233	350	140	OT25ELPP3C	1SCA022473R1740	1.9
40	23	2xø25+ø16	233	350	140	OT32ELMM3C	1SCA022473R1910	1.9
40	23	2xø28,3+ø18,6	233	350	140	OT32ELPP3C	1SCA022473R2120	1.9
63	45	2xø32+ø16	233	350	140	OT45ELMM3C	1SCA022473R2390	4.0
63	45	2xø37+ø18,6	233	350	140	OT45ELPP3C	1SCA022473R2550	4.0
80	63	2xø32+ø16	233	350	140	OT63ELMM3C	1SCA022473R2710	4.0
80	63	2xø37+ø18,6	233	350	140	OT63ELPP3C	1SCA022473R2980	4.0
Delivery without cable entries, top and bottom sides are open. Cable entries for C-flanges or for ring-flanges have to be ordered separately, see accessories. These entries are used also for fixing the enclosed switches. Flanges and connection bars for parallel connection have to be ordered separately too. Includes pistol type black handle (I-O-II indication), N- and PE-terminals.								
160	135	Open	400	600	230	OT160KLAA3C	1SCA120678R1001	20.0
200	200	Open	400	600	230	OT200KLAA3C	1SCA022280R2360	31.0
250	250	Open	400	600	230	OT250KLAA3C	1SCA022280R2520	36.0
315	315	Open	400	800	330	OT315KLAA3C	1SCA022280R2790	36.0
400	400	Open	400	800	330	OT400DLAA3C	1SCA022280R2950	39.0
570	570	Open	800	1000	330	OT630KLAA3C	1SCA022280R3170	48.0
720	720	Open	800	1000	330	OT800KLAA3C	1SCA022389R8310	48.0

* IP65 available on request

4-pole front operated change-over switches

Steel sheet enclosed, IP54*

Rated operational current [A] AC22A ≤690V	AC23A ≤415V	Cable outlets/ side	Enclosure size [mm] W	H	D	Type	Order number	Weight [kg]
Delivery without cable entries, top and bottom sides are open. Cable entries for C-flanges or for ring-flanges have to be ordered separately, see accessories. These entries are used also for fixing the enclosed switches. Flanges and connection bars for parallel connection have to be ordered separately too. Includes pistol type black handle (I-O-II indication), PE-terminals.								
160	135	Open	400	600	230	OT160KLAA4C	1SCA120697R1001	21.0
200	200	Open	400	600	230	OT200KLAA4C	1SCA022474R6930	31.0
250	250	Open	400	600	230	OT250KLAA4C	1SCA022474R7070	36.0
315	315	Open	400	800	330	OT315KLAA4C	1SCA022474R7150	36.0
400	400	Open	400	800	330	OT400DLAA4C	1SCA022292R6680	39.0
570	570	Open	800	1000	330	OT630KLAA4C	1SCA022475R1180	48.0
720	720	Open	800	1000	330	OT800KLAA4C	1SCA022580R4340	48.0

* IP65 available on request

Ordering information
Plastic enclosed switch fuses

OS20...32P
S01022A

OS32G...400
S00835A

3-pole front operated switch fuses, BS-type

Plastic enclosed, IP65

I_{th} +40°C [A]	Rated operational current AC22A/ AC23A 500V [A/A]	Suitable for fuse type BS 88	Cable outlets/ side	Enclosure size [mm] W	H	D	Type	Order number	Weight [kg]
Includes pistol-type black handle (I-0 and ON-OFF indication), N- and PE-terminals.									
Delivery with blank cable entries.									
20	20/20	A1	-	175	250	150	OS20PA1FUU3B	1SCA022280R9290	1.7
32	32/32	A1	-	175	250	150	OS32PA1FUU3B	1SCA022281R0460	1.7
Includes pistol-type black handle (I-0 and ON-OFF indication), N- and PE-terminals.									
Cable knock-outs as standard, flanges have to be ordered separately.									
32	32/32	A2-A3	II-flange	280	190	180	OS32GA3FCC3B	1SCA022281R1600	2.8
63	63/63	A2-A3	II-flange	280	190	180	OS63GA3FCC3B	1SCA022280R6780	2.8
125	135/100	A2-A3	II-flange	280	380	180	OS100GA4FCC3B	1SCA022280R8560	4.9
200	200/200	B1-B2	II-flange	380	560	280	OS200BB2FCC3B	1SCA022280R9110	13.6
315	315/315	B1-B3	II-flange	380	560	280	OS315BB3FCC3B	1SCA022281R0380	14.6
400	400/400	B1-B4	II-flange	380	560	280	OS400BB4FCC3B	1SCA022302R6630	14.6

4-pole front operated switch fuses, BS-type

Plastic enclosed, IP65

I_{th} +40°C [A]	Rated operational current AC22A/ AC23A 500V [A/A]	Suitable for fuse type BS 88	Cable outlets/ side	Enclosure size [mm] W	H	D	Type	Order number	Weight [kg]
Includes pistol-type black handle (I-0 and ON-OFF indication), N- and PE-terminals.									
Delivery with blank cable entries.									
20	20/10	A1	-	175	250	150	OS20PA1FUU4B	1SCA022280R9880	1.8
32	32/15	A1	-	175	250	150	OS32PA1FUU4B	1SCA022281R1010	1.8
Includes pistol-type black handle (I-0 and ON-OFF indication), N- and PE-terminals.									
Cable knock-outs as standard, flanges have to be ordered separately.									
32	32/15	A2-A3	II-flange	280	190	180	OS32GA3FCC4B	1SCA022280R6190	3.0
63	63/30	A2-A3	II-flange	280	190	180	OS63GA3FCC4B	1SCA022280R7320	3.0
125	100/55	A2-A3	II-flange	280	380	180	OS100GA4FCC4B	1SCA022280R7910	5.2
200	200/110	B1-B2	II-flange	380	560	280	OS200BB2FCC4B	1SCA022280R9700	14.4

Ordering information
Plastic enclosed switch fuses

OS00-32...400
S00835A

3-pole front operated switch fuses, DIN-type

Plastic enclosed, IP65

I_{th} +40°C [A]	Rated operational current AC22A/ AC23A 500V [A/A]	Suitable for fuse type DIN	Cable outlets/ side	Enclosure size [mm] W	H	D	Type	Order number	Weight [kg]
Includes pistol-type black handle (I-0 and ON-OFF indication), N- and PE-terminals.									
Cable knock-outs as standard, flanges have to be ordered separately.									
32	32/32	00	II-flange	280	190	180	OS00-32A00FCC3B	1SCA022315R1450	2.8
63	63/63	00	II-flange	280	190	180	OS00-63A00FCC3B	1SCA022315R1610	3.0
125	125/100	00	II-flange	280	380	180	OS00A00FCC3B	1SCA022315R2260	4.9
135	135/100	00	II-flange	380	560	180	OS00-160A00FCC3B	1SCA022315R2690	8.0
250	250/250	0-1	II-flange	380	560	280	OS250D1FCC3B	1SCA022315R3070	13.8
400	400/400	0-2	II-flange	380	560	280	OS400D2FCC3B	1SCA022315R3400	14.6

4-pole front operated switch fuses, DIN-type

Plastic enclosed, IP65

I_{th} +40°C [A]	Rated operational current AC22A/ AC23A 500V [A/A]	Suitable for fuse type DIN	Cable outlets/ side	Enclosure size [mm] W	H	D	Type	Order number	Weight [kg]
Includes pistol-type black handle (I-0 and ON-OFF indication), N- and PE-terminals.									
Cable knock-outs as standard, flanges have to be ordered separately.									
32	32/32	00	II-flange	280	190	180	OS00-32A00FCC4B	1SCA022315R1880	3.0
63	63/63	00	II-flange	280	190	180	OS00-63A00FCC4B	1SCA022315R2000	3.0
125	125/100	00	II-flange	280	380	180	OS00A00FCC4B	1SCA022315R2420	5.2
135	135/100	00	II-flange	380	560	180	OS00-160A00FCC4B	1SCA022315R2850	8.5
250	250/250	0-1	II-flange	380	560	280	OS250D1FCC4B	1SCA022315R3230	14.0
400	400/400	0-2	II-flange	560	760	250	OS400D2FCC4B	1SCA022628R6070	14.8

Ordering information
Steel sheet enclosed switch fuses

OS32...800
S00507A

2-pole front operated switch fuses, BS-type

Steel sheet enclosed, IP65

I_{th} +40°C [A]	Rated operational current AC22A/ AC23A 500V [A/A]	Suitable for fuse type BS 88	Cable outlets/ side	Enclosure size [mm] W	H	D	Type	Order number	Weight [kg]
Includes pistol-type black handle (I-0 and ON-OFF indication), N- and PE-terminals.									
Delivery with blank cable entries.									
32	32/32	A2-A3	-	250	400	180	OS32GA3LUU2FZ	1SCA022320R7510	8.8
63	63/63	A2-A3	-	250	400	180	OS63GA3LUU2FZ	1SCA022320R7770	8.8
125	125/100	A2-A4	-	250	400	180	OS100GA4LUU2FZ	1SCA022320R7930	9.4
135	135/100	B1-B2	-	400	600	230	OS160BB2LUU2FZ	1SCA022320R8150	19.0
200	200/200	B1-B2	-	400	600	330	OS200BB2LUU2FZ	1SCA022320R8310	27.1
315	315/315	B1-B3	-	400	800	330	OS315BB3LUU2FZ	1SCA022320R8580	27.9
400	400/400	B1-B4	-	400	800	330	OS400BB4LUU2FZ	1SCA022320R8740	28.3
600	600/600	C1-C2	-	400	1000	330	OS630BC2LUU2FZ	1SCA022320R8910	39.0
720	720/720	C1-C3	-	400	1000	330	OS800BC3LUU2FZ	1SCA022320R9120	59.3

Ordering information
Steel sheet enclosed switch fuses

OS20...32
S00824A

3-pole front operated switch fuses, BS-type

Steel sheet enclosed, IP54

I_{th} +40°C [A]	Rated operational current AC22A/ AC23A 500V [A/A]	Suitable for fuse type BS 88	Cable outlets/ side	Enclosure size [mm] W	H	D	Type	Order number	Weight [kg]
Includes pistol-type black handle (I-0 and ON-OFF indication), N- and PE-terminals.									
Cable knock-outs as standard, compression glands have to be ordered separately.									
20	20/20	A1	2xø25+ø16	233	350	140	OS20PA1LMM3B	1SCA022281R1510	4.0
32	32/32	A1	2xø25+ø16	233	350	140	OS32PA1LMM3B	1SCA022281R2670	4.0

4-pole front operated switch fuses, BS-type

Steel sheet enclosed, IP54

I_{th} +40°C [A]	Rated operational current AC22A/ AC23A 500V [A/A]	Suitable for fuse type BS 88	Cable outlets/ side	Enclosure size [mm] W	H	D	Type	Order number	Weight [kg]
Includes pistol-type black handle (I-0 and ON-OFF indication), N- and PE-terminals.									
Cable knock-outs as standard, compression glands have to be ordered separately.									
20	20/20	A1	2xø25+ø16	233	350	140	OS20PA1LMM4B	1SCA022281R2080	4.1
32	32/32	A1	2xø25+ø16	233	350	140	OS32PA1LMM4B	1SCA022281R3210	4.1

Ordering information
Steel sheet enclosed switch fuses

OS20...800
S00507A

3-pole front operated switch fuses, BS-type

Steel sheet enclosed, IP65

I_{th} +40°C [A]	Rated operational current AC22A/ AC23A 500V [A/A]	Suitable for fuse type BS 88	Cable outlets/ side	Enclosure size [mm] W	H	D	Type	Order number	Weight [kg]
Includes pistol-type black handle (I-0 and ON-OFF indication), N- and PE-terminals.									
Delivery with blank cable entries.									
20	20/20	A1	-	250	400	180	OS20PA1LUU3FZ	1SCA022320R8400	8.5
32	32/32	A1	-	250	400	180	OS32PA1LUU3FZ	1SCA022320R8660	8.5
32	32/32	A2-A3	-	250	400	180	OS32GA3LUU3FZ	1SCA022320R8820	9.2
63	63/63	A2-A3	-	250	400	180	OS63GA3LUU3FZ	1SCA022320R9040	9.2
125	125/100	A2-A4	-	250	400	180	OS100GA4LUU3FZ	1SCA022320R9210	9.8
135	135/100	B1-B2	-	400	600	230	OS160BB2LUU3FZ	1SCA022320R9470	19.4
200	200/200	B1-B2	-	400	600	330	OS200BB2LUU3FZ	1SCA022320R9630	28.3
315	315/315	B1-B3	-	400	800	330	OS315BB3LUU3FZ	1SCA022320R9800	29.1
400	400/400	B1-B4	-	400	800	330	OS400BB4LUU3FZ	1SCA022321R0050	29.5
600	600/600	C1-C2	-	800	1000	330	OS630BC2LUU3FZ	1SCA022321R0210	44.4
720	720/720	C1-C3	-	800	1000	330	OS800BC3LUU3FZ	1SCA022321R0480	65.0

4-pole front operated switch fuses, BS-type

Steel sheet enclosed, IP65

I_{th} +40°C [A]	Rated operational current AC22A/ AC23A 500V [A/A]	Suitable for fuse type BS 88	Cable outlets/ side	Enclosure size [mm] W	H	D	Type	Order number	Weight [kg]
Includes pistol-type black handle (I-0 and ON-OFF indication), N- and PE-terminals.									
Delivery with blank cable entries.									
20	20/20	A1	-	250	400	180	OS20PA1LUU4FZ	1SCA022321R0640	8.6
32	32/32	A1	-	250	400	180	OS32PA1LUU4FZ	1SCA022321R0810	8.6
32	32/32	A2-A3	-	250	400	180	OS32GA3LUU4FZ	1SCA022321R1020	9.4
63	63/63	A2-A3	-	250	400	180	OS63GA3LUU4FZ	1SCA022320R5990	9.4
125	125/100	A2-A4	-	250	400	180	OS100GA4LUU4FZ	1SCA022320R6110	10.3
135	135/100	B1-B2	-	400	600	230	OS160BB2LUU4FZ	1SCA022320R6370	19.9
200	200/200	B1-B2	-	400	800	330	OS200BB2LUU4FZ	1SCA022320R6530	29.2
315	315/315	B1-B3	-	400	800	330	OS315BB3LUU4FZ	1SCA022320R6700	29.9
400	400/400	B1-B4	-	400	800	330	OS400BB4LUU4FZ	1SCA022320R6960	30.4
600	600/600	C1-C2	-	800	1000	330	OS630BC2LUU4FZ	1SCA022320R7180	67.8
720	720/720	C1-C3	-	800	1000	330	OS800BC3LUU4FZ	1SCA022320R7340	71.0

Ordering information
Steel sheet enclosed switch fuses

OS00-32...800
S00834A

3-pole front operated switch fuses, DIN-type

Steel sheet enclosed, IP54 and IP65

Delivery without cable entries, top and bottom sides are open. Cable entries for C-flanges or for ring-flanges have to be ordered separately, see accessories. These entries are used also for fixing the enclosed switches. Flanges have to be ordered separately too.Includes pistol-type black handle (I-0 and ON-OFF indication), N- and PE-terminals.

I_{th} +40°C [A]	Rated operational current AC22A/ AC23A 500V [A/A]	Suitable for fuse type DIN	Cable outlets/ side	Enclosure size [mm] W	H	D	Type	Order number	Weight [kg]
IP54									
32	32/32	00	Open	250	400	180	OS00-32A00LAA3B	1SCA022325R2560	9.2
63	63/63	00	Open	250	400	180	OS00-63A00LAA3B	1SCA022292R9600	9.2
125	125/100	00	Open	250	400	180	OS00A00LAA3B	1SCA022325R3110	9.8
135	135/100	00	Open	400	600	230	OS00-160A00LAA3B	1SCA022325R3530	17.8
250	250/250	0-1	Open	400	800	330	OS250D1LAA3B	1SCA022325R3960	28.6
400	400/400	0-2	Open	400	800	330	OS400D2LAA3B	1SCA022292R9860	29.6
600	600/600	3	Open	800	1000	330	OS630D3LAA3B	1SCA022325R4510	43.4
720	720/720	3	Open	800	1000	330	OS800D3LAA3B	1SCA022325R4930	65.0
IP65									
32	32/32	00	Open	250	400	180	OS00-32A00LAA3BZ	1SCA022325R2720	9.2
63	63/63	00	Open	250	400	180	OS00-63A00LAA3BZ	1SCA022325R2990	9.2
125	125/100	00	Open	250	400	180	OS00A00LAA3BZ	1SCA022325R3370	9.8
135	135/100	00	Open	400	600	230	OS00-160A00LAA3BZ	1SCA022325R3700	17.8
250	250/250	0-1	Open	400	800	330	OS250D1LAA3BZ	1SCA022325R4180	28.6
400	400/400	0-2	Open	400	800	330	OS400D2LAA3BZ	1SCA022325R4340	29.6
600	600/600	3	Open	800	1000	330	OS630D3LAA3BZ	1SCA022325R4770	43.4
720	720/720	3	Open	800	1000	330	OS800D3LAA3BZ	1SCA022325R5150	65.0

Ordering information
Steel sheet enclosed switch fuses

OS00-32...800
S00834A

4-pole front operated switch fuses, DIN-type

Steel sheet enclosed, IP54 and IP65

I_{th} +40°C [A]	Rated operational current AC22A/ AC23A 500V [A/A]	Suitable for fuse type DIN	Cable outlets/ side	Enclosure size [mm] W	H	D	Type	Order number	Weight [kg]
Delivery without cable entries, top and bottom sides are open. Cable entries for C-flanges or for ring-flanges have to be ordered separately, see accessories. These entries are used also for fixing the enclosed switches. Flanges have to be ordered separately too.Includes pistol-type black handle (I-0 and ON-OFF indication), N- and PE-terminals.									
IP54									
32	32/32	00	Open	250	400	180	OS00-32A00LAA4B	1SCA022325R5310	9.4
63	63/63	00	Open	250	400	180	OS00-63A00LAA4B	1SCA022325R5910	9.4
125	125/100	00	Open	250	400	180	OS00A00LAA4B	1SCA022320R6020	10.0
135	135/100	00	Open	400	600	230	OS00-160A00LAA4B	1SCA022320R6450	18.0
250	250/250	0-1	Open	400	800	330	OS250D1LAA4B	1SCA022320R6880	29.4
400	400/400	0-2	Open	400	800	330	OS400D2LAA4B	1SCA022320R7260	30.5
600	600/600	3	Open	800	1000	330	OS630D3LAA4B	1SCA022320R7690	67.8
720	720/720	3	Open	800	1000	330	OS800D3LAA4B	1SCA022320R8070	70.8
IP65									
32	32/32	00	Open	250	400	180	OS00-32A00LAA4BZ	1SCA022325R5740	9.4
63	63/63	00	Open	250	400	180	OS00-63A00LAA4BZ	1SCA022320R5810	9.4
125	125/100	00	Open	250	400	180	OS00A00LAA4BZ	1SCA022320R6290	10.0
135	135/100	00	Open	400	600	230	OS00-160A00LAA4BZ	1SCA022320R6610	18.0
250	250/250	0-1	Open	400	800	330	OS250D1LAA4BZ	1SCA022320R7000	29.4
400	400/400	0-2	Open	400	800	330	OS400D2LAA4BZ	1SCA022320R7420	30.5
600	600/600	3	Open	800	1000	330	OS630D3LAA4BZ	1SCA022320R7850	67.8
720	720/720	3	Open	800	1000	330	OS800D3LAA4BZ	1SCA022320R8230	70.8

Accessories
Selection overview

Plastic enclosures

Side and front operated

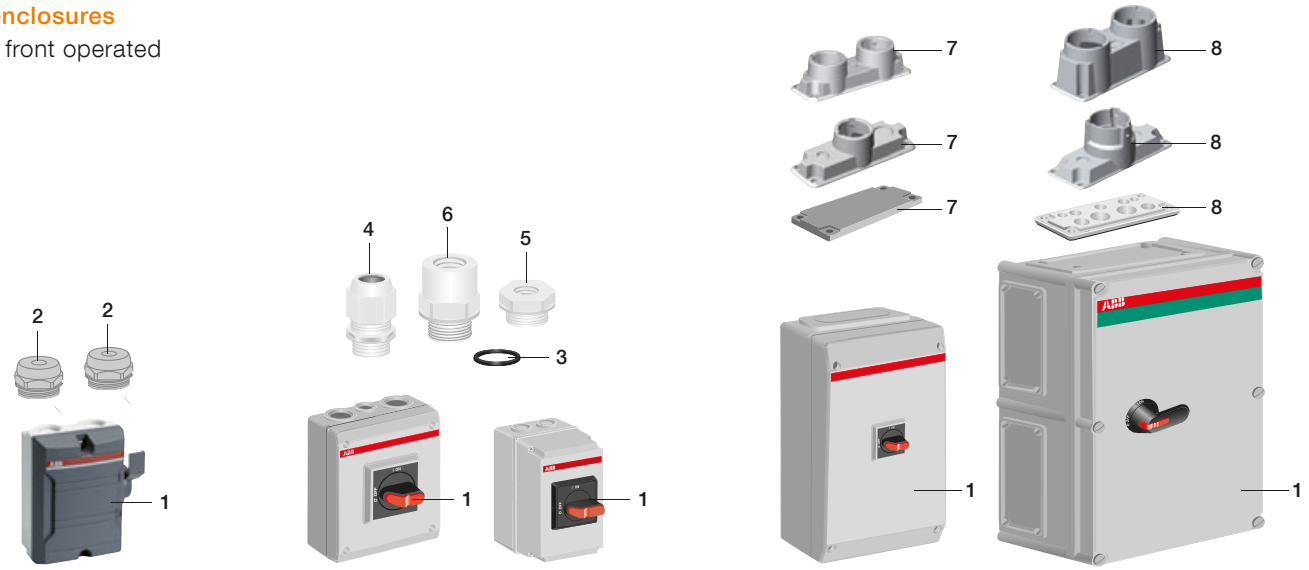

1 Enclosure | 2 Membrane gland/sealing plug (included) | 3 Gasket | 4 Compression gland | 5 Adapter (reducer)| 6 Adapter (expander) | 7 I-Flange | 8 II-Flange

Steel sheet enclosures

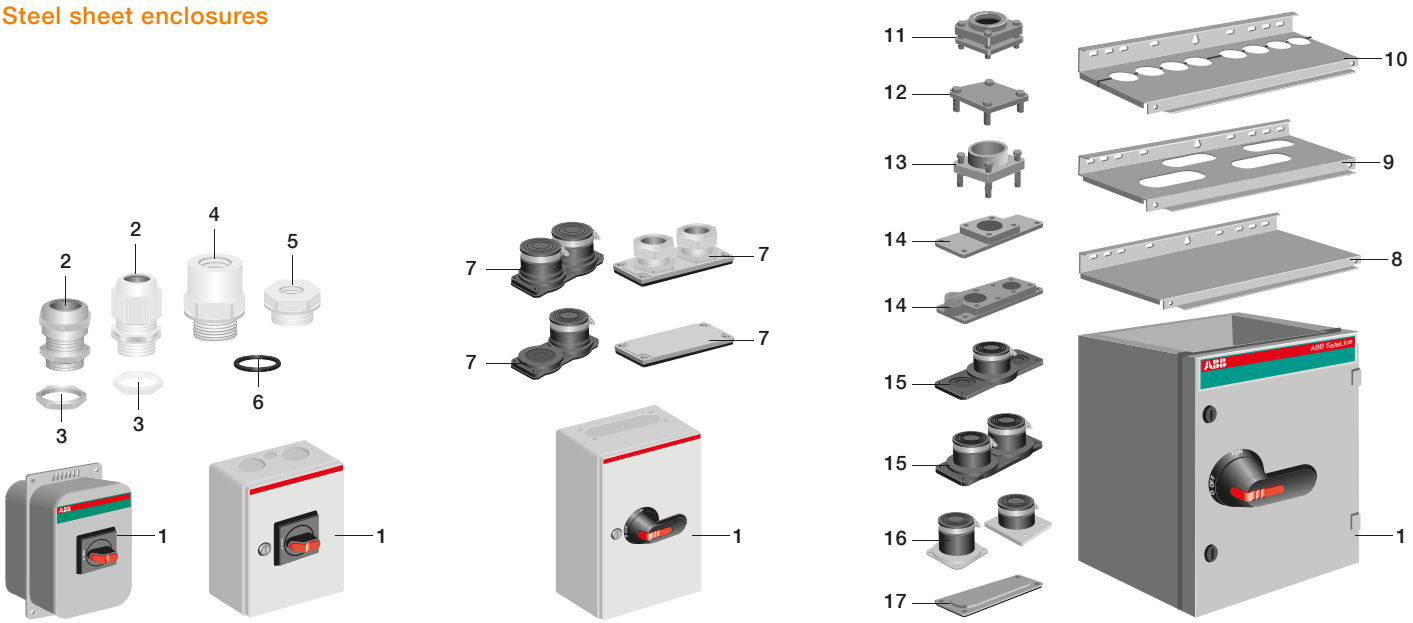

1 Enclosure | 2 Compression gland | 3 Locking nut | 4 Adapter (expander) | 5 Adapter (reducer) | 6 Gasket | 7 B-flange | 8 Blank cable entry | 9 Cable entry with C-flange entries | 10 Cable entry with ring-flange entries | 11 Ring-flange | 12 Ring-flange cover | 13 Plate extension for ring-flanges | 14 Ring-flange adapters for C-flange covers | 15 C-flange | 16 Cable inlets | 17 C-flange cover

Stainless steel sheet enclosures

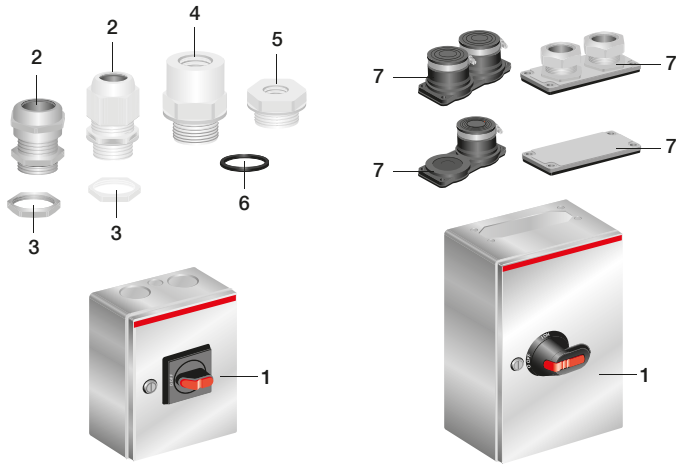

1 Enclosure | 2 Compression gland | 3 Locking nut | 4 Adapter (expander) | 5 Adapter (reducer) | 6 Gasket | 7 B-flange

Aluminum enclosures

Side and front operated

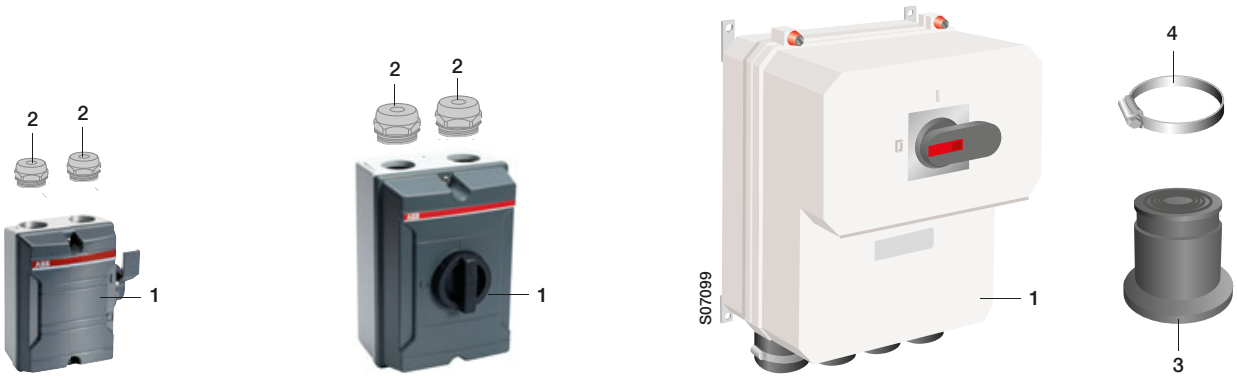

1 Enclosure | 2 Membrane gland/sealing plug (included) | 3 Cable tightening / gland (included) | 4 Hose clamp (included)

Ordering information
Accessories

OHB_
S00601A

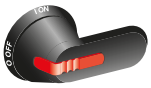

OHB_
S00469A

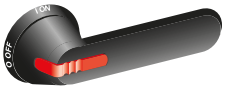

OHB274J12
S07078

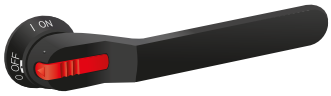

OHY_
S00853A

OHY_
S00865A

Handles, plastic, black

Colour = black, IP65. The handles are padlockable with 3 padlocks in O-position, door interlock in I-position, defeatable. Selector type handles are available on request.

For enclosed switches	Handle length [mm]	Shaft diameter [mm]	Type	Order number	Units/ type [pcs]	Weight/ unit [kg]
Pistol type handle for 3- and 4-pole enclosed switch-disconnectors, indication I-O and ON-OFF						
OTL/OTR100…125, OT125	45	6	OHB45J6	1SCA022380R8770	1	0.10
OT160…250	65	6	OHB65J6	1SCA022380R9660	1	0.12
OT315...400	95	12	OHB95J12	1SCA022381R0830	1	0.16
OT630...800	125	12	OHB125J12	1SCA022381R1560	1	0.17
OT1000…1600	274	12	OHB274J12	1SCA115920R1001	1	0.54
Pistol type handle for 6-pole enclosed switch-disconnectors, indication I-O and ON-OFF						
OTP/OTL/OTR45…63, OTP125, OT125	45	6	OHB45J6	1SCA022380R8770	1	0.10
OT160…250	65	6	OHB65J6	1SCA022380R9660	1	0.12
OT315...800	145	12	OHB145J12	1SCA022381R2110	1	0.17
Pistol type handle for 3- and 4-pole enclosed change-over switches, indication I-O-II, padlockable in O-position						
OT16…125_C	45	6	OHB45J6E011	1SCA022594R7110	1	0.10
OT160…250_C	65	6	OHB65J6E011	1SCA022383R2480	1	0.12
OT315...400_C	95	12	OHB95J12E011	1SCA022621R0760	1	0.16
OT630...800_C	125	12	OHB125J12E011	1SCA022589R3340	1	0.17
Pistol type handle for 2-, 3- and 4-pole enclosed switch fuses, indication I-O and ON-OFF						
OS20…250, OS00-32…00-160	65	6	OHB65J6	1SCA022380R9660	1	0.12
OS315…400	95	12	OHB95J12	1SCA022381R0830	1	0.16
OS630…800	145	12	OHB145J12	1SCA022381R2110	1	0.17

Handles, plastic, red-yellow

Indication I-O and ON-OFF, colour = red-yellow, IP65. The handles are padlockable with 3 padlocks in O-position, door interlock in I-position, defeatable. Selector type handles are available on request.

For enclosed switches	Handle length [mm]	Shaft diameter [mm]	Type	Order number	Units/ type [pcs]	Weight/ unit [kg]
Pistol type handle for 3- and 4-pole enclosed switch-disconnectors						
OTL/OTR100...125, OT125	45	6	OHY45J6	1SCA022380R8930	1	0.10
OT160…250	65	6	OHY65J6	1SCA022380R9820	1	0.12
OT315...400	95	12	OHY95J12	1SCA022381R1050	1	0.16
OT630...800	125	12	OHB125J12	1SCA022381R1560	1	0.17
Pistol type handle for 6-pole enclosed switch-disconnectors						
OTP/OTL/OTR45…63, OTP125	45	6	OHY45J6	1SCA022380R8930	1	0.10

- Door interlocking in I-position means that the door can not be opened, when the handle is in ON-position. This can be defeated in IP 65 types to allow authorized personnel access for inspection. Equally, the door is interlocked when the handle is padlocked. Handles padlockable also in ON-position are available on request.

Ordering information
Accessories

OA1G_, OA7G10, OA3G01
S00261A

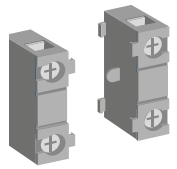

OA2G11
S01025A

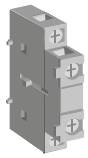

OBEA _
S00040A

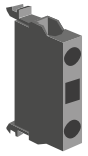

OZXK__
S01248A

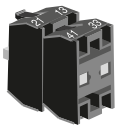

OEZNP1
S00492A

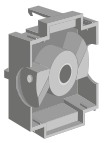

Auxiliary contacts

Auxiliary contacts for enclosed switch-disconnectors OT_16_...125F, KSF_25...40, KSE_25...125 and BW_16...40

The auxiliary contacts n.o. open before the main contacts. See the maximum amount of auxiliary contacts on the table 'Auxiliary contacts / Enclosed Switches' on page 71.

For switches	Auxiliary contact	Mounting to the switch	Type	Order number	Delivery batch [pcs]	Weight [kg]
OT_16_...125F, KSE63...125	1no	right side	OA1G10	1SCA022353R4970	10	0.03
OT_16_...125F, KSE63...125	1no	left side	OA7G10	1SCA022673R1140	10	0.03
OT_16_...125E, KSE63...125	1nc	left side	OA1G01	1SCA022353R4890	10	0.03
BW_/KSE_16...40, KSF_25...40	1no	with OEZNP1	OBEA10	1SCA022190R3000	10	0.01
BW_/KSE_16...40, KSF_25...40	1nc	with OEZNP1	OBEA01	1SCA022190R3260	10	0.01
OT_16_...125F	1no+1nc	both sides[2]	OA2G11	1SCA022379R8100	10	0.03

Auxiliary contacts for switch-disconnectors OT125A...1600 , KSE3160...3630, OS_[1]

See the maximum amount of auxiliary contacts on the table 'Auxiliary contacts / Enclosed Switches' on page 71.

For switches	Auxiliary contact	Mounting	Type	Order number	Delivery batch [pcs]	Weight [kg]
OT125A...160_, KSE3160-3250	1no	with OEZNP1	OBEA10	1SCA022190R3000	10	0.02
OT125A...160_, KSE3160-3250	1no	with OEZNP1	OBEA10AU	1SCA022185R3310	10	0.02
OT200...1600, OS_	1no		OA1G10	1SCA022353R4970	10	0.03
OT125A...160_, KSE3160	1nc	with OEZNP1	OBEA01	1SCA022190R3260	10	0.02
OT125A...160_, KSE3160	1nc	with OEZNP1	OBEA01AU	1SCA022185R3730	10	0.02
OT200...1600, OS_	1nc		OA3G01	1SCA022456R7410	10	0.03
KSE3315-3250	1no+1nc		OZXK12	2CMA144521R1000	1	0.12
KSE3500-3630	1no+1nc		OZXK1	2CMA144522R1000	1	0.12

Adapter for OBEA_

Mountable on top of the switch

			OEZNP1	1SCA022259R7410	1	0.02

[1] Types _AU for extremely difficult circumstances, even at low voltages. The contacts are gold plated.
[2] Not mountable on the side as the fourth pole.

1 no

1 nc

1 no + 1 nc

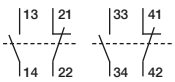

Ordering information
Accessories

Technical data of auxiliary contacts:

		OA_	OBEA_ and OZXK_
Protection class		IP20	IP20
Rated thermal current I_{th} / Insulation voltage		16 A / 690 V	10 A / 690 V
Cable cross section, max. / min.		2 x 2.5 / 0.75 mm^2	2 x 2.5 / 0.5 mm^2
Operational current in different voltages, (IEC 60947-5-1)			
AC-15	230 V	6 A	-
	400 V / 415 V	4 A	-
	690 V	2 A	-
AC-12	120 V / 240 V	-	8 A / 6 A
	400 / 415 V	-	4 A
	480 / 500 V	-	3 A
	690 V	-	2 A
DC-12	24 V / 72 V	10 A / 4 A	5 A / 1.9 A
	125 V / 250 V	2 A / 0.55 A	1.1 A / 0.55 A
	440 V / 500 V	0.1 A / -	0.31 A / 0.27 A
	600 V	-	0.2 A

Ordering information
Accessories

OZXA32
S01469A

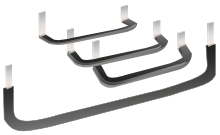

OZXA33
S01470A

OZXA38
S02078A

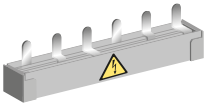

OZXA39
S02077A

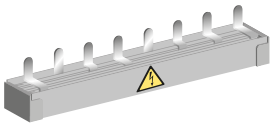

OTZC_
S02185A

OTZR_
S07120

Parallel connection kits for change-over switches

For switches	Number of poles	Max. cable size [mm²]	Type	Order number	Weight [kg]
Connection bars					
Finger protected connection bars for parallel connection of incoming or outgoing terminals. The bars accept additional cables, the maximum size is stated below.					
OT16...32E_3C		6 (fine stranded), 10 (stranded)	OZXA33	1SCA022685R0310	0.02
OT16...32E_4C		6 (fine stranded), 10 (stranded)	OZXA32	1SCA022683R4110	0.03
OT45...63E_3C		25	OZXA38	1SCA022790R3740	0.06
OT45...63E_4C		25	OZXA39	1SCA022785R2490	0.09
Bridging bars					
The bridging bars provide a connection link either on the incoming or outgoing side of the change-over switch.					
OT200...250	3		OTZC13	1SCA022767R6910	0.60
	4		OTZC14	1SCA022767R7040	0.80
OT315...400	3		OTZC23	1SCA022767R7120	0.60
	4		OTZC24	1SCA022767R7210	0.80
OT630...800	3		OTZC33	1SCA022785R7020	1.00
	4		OTZC34	1SCA022785R7110	1.30
Reversing bars					
A reversing switch can be built up by using phase sequence bars in two phases. The kit includes two phase sequence conversion bars. The missing bridging bars must be ordered separately. For example 3-pole switches: one 4-pole standard bridging bar kit is required (one bar for the reversing side, three bars for the other side).					
OT160...250_C			OTZR1	1SCA100352R1001	0.3
OT315...400_C			OTZR2	1SCA104647R1001	0.3
OT600...800_C			OTZR3	1SCA100355R1001	0.4

Ordering information
Enclosure accessories

OEZXP__0
1. S00512A, 2. S00808A

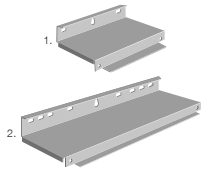

OEZXP__R
1. S00810A, 2. S00811A, 3. S00812A, 4. S00813A

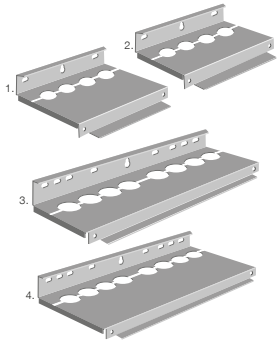

OEZXP__C
1. S00814A, 2. S00815A, 3. S00817A, 4. S00816A, 5. S00818A

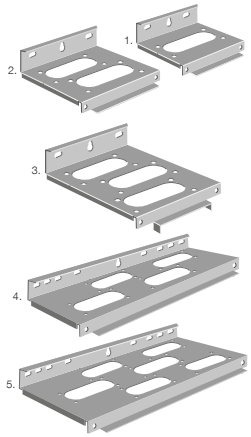

Cable entries for steel sheet enclosures

These cable entries are also used for fixing the enclosed switches. The flanges have to be ordered separately.

Size of cable entry W x D [mm]	Number of C-flange entries [pcs]	Number of ring-flange entries [pcs]	Type	Order number	Weight [kg]
Blank entries, no flange entries					
250x180	-	-	OEZXP120[1]	1SCA022277R2350	0.8
400x230	-	-	OEZXP240	1SCA022277R2780	1.5
400x330	-	-	OEZXP340	1SCA022277R3320	2.0
800x230	-	-	OEZXP280	1SCA022277R3910	3.0
800x330	-	-	OEZXP380	1SCA022277R4720	4.0
Cable entries with ring-flange entries, divided[2]					
400x230	-	4	OEZXP24R	1SCA022277R3160	1.6
400x330	-	4	OEZXP34R	1SCA022277R3750	2.1
800x230	-	8	OEZXP28R	1SCA022277R4560	3.2
800x330	-	8	OEZXP38R	1SCA022277R5020	4.2
Cable entries with C-flange entries, compact[2]					
250x180	1	-	OEZXP120C[1]	1SCA022338R5360	0.8
400x230	2	-	OEZXP240C	1SCA022338R5520	1.7
400x330	3	-	OEZXP340C	1SCA022338R5790	2.3
800x230	4	-	OEZXP280C	1SCA022338R5950	3.4
800x330	6	-	OEZXP380C	1SCA022338R6170	4.5
Cable entry gasket set for IP65 switches					
For IP65 switches only, to seal up the cable entry			OEZXX2	1SCA022281R5340	

[1] Includes knock-outs ø 10, 12.5, 20.5 and 25.5
[2] Includes knock-outs ø 10, 12.5, 20.5, 25.5 and 32.5

Ordering information
Enclosure accessories

OEZXR1__
S00514A

OEZXR0_
S00515A

OEZXX1__
S00952A

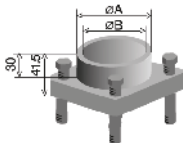

Cable flanges for steel sheet enclosures

Ring-flanges for different cable diameters

Outside diameter of cable [mm]	Suitable for cable entries	Type	Order number	Weight [kg]
22...35	OEZXP_R	OEZXR134	1SCA022277R5610	0.45
31...44	OEZXP_R	OEZXR143	1SCA022277R5880	0.40
39...51	OEZXP_R	OEZXR150	1SCA022277R6000	0.35
46...59	OEZXP_R	OEZXR158	1SCA022277R6260	0.30

Ring-flange covers with knock-out openings

Knock-out size ø / [mm]	Suitable for cable entries	Type	Order number	Weight [kg]
20.5	OEZXP__R	OEZXR020	1SCA022656R8130	0.16
22.5	OEZXP__R	OEZXR023	1SCA022277R5290	0.16
25.5	OEZXP__R	OEZXR025	1SCA022656R8120	0.16
37	OEZXP__R	OEZXR037	1SCA022277R5450	0.16
40.5	OEZXP__R	OEZXR040	1SCA022656R8300	0.16

Plate extension for ring-flanges

Screws are included in the delivery.
With a plate extension the shrinkable hose can be mounted around the ring-flange and the cable.

Suitable for ring-flanges	Dimensions [mm] A	B	Type	Order number	Weight [kg]
OEZXR134 and OEZXR143	49	43	OEZXX143R	1SCA022350R3820	0.18
OEZXR150 and OEZXR158	70	64	OEZXX158R	1SCA022350R3910	0.18

Ordering information
Enclosure accessories

KIG-221-1
S00997A

KIG-221-2
S00996A

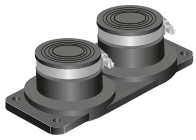

OEZXC 0
S00846B

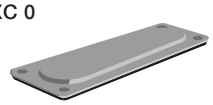

KIM-13-1
S01395A

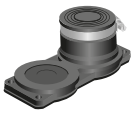

KIM-13-2
S01396A

LPBSIU
S01775A

LBSI2ALM40
S01774A

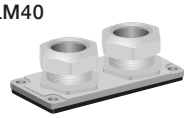

KIG-1
S00993A

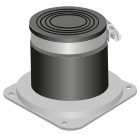

KIG-2
S00994A

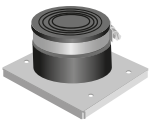

OEZXC1R
S00846A

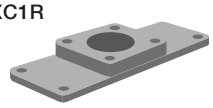

OEZXC2R
S00847A

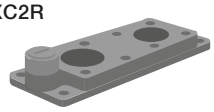

Cable flanges for steel sheet enclosures

C and B flanges

Mounting set for the flange is included: screws, nuts and sealing gasket or a seal extruded into the flanges.

Suitable cable size ø / [mm]	For cable entries/ Compression glands	Type	Order number	Weight [kg]
C-flanges for cable entries				
20...65	See the picture below	KIG-221-1	1SEH650052R6713	0.49
2x(20...65)		KIG-221-2	1SEH650052R6714	0.72
C-flange cover, steel				
-	OEZXP__C	OEZXC 0	1SCA022277R6420	0.25
B-flanges for cable entries				
15...40	See the picture below	KIM13-1	1SEH655267R2050	0.20
2x(15...40)		KIM13-2	1SEH655267R2060	0.30
B-flange cover, metallic, IP65				
-	Fe, hot dip galvanized	LBFEU	1SCA022713R6040	0.16
-	Siluminium	LBSIU	1SCA022713R6120	0.20
B-flanges for cable entries, metallic, compression glands, IP65				
8....14	2xM20	LBSI2ALM20	1SCA022713R6210	0.26
10...16	4xM25	LBSI4ALM25	1SCA022713R6390	0.26
16....21	3xM32	LBSI3ALM32	1SCA022713R6550	0.26
18....27	2xM40	LBSI2ALM40	1SCA022713R6630	0.26
16....21 (M32)/10...16 (M25)	2xM32+1xM25	LBSI2ALM32+1ALM25	1SCA022722R3520	0.26
10...16	3xM25+1xM25 (Blank plug)	LBSI3ALM25+1TM25	1SCA022722R3610	0.22
Cable inlet, metallic				
15...45	See the picture below	KIG-1	1SEH650052R6711	0.22
20...65		KIG-2	1SEH650052R6712	0.40

Ring-flange adapters for C-flange entries, Aluminum alloy

Mounting set for the flange is included: screws, nuts and a seal extruded into the flanges. Ring-flanges have to be ordered separately.

Remarks	Suitable for cable entries	Type	Order number	Weight [kg]
One hole for ring- flanges and knock-outs ø 21, ø 23, ø 29	OEZXP__C	OEZXC1R	1SCA022281R3560	0.53
Two holes for ring-flanges and one with Pg 16 threads	OEZXP__C	OEZXC2R	1SCA022281R3720	0.55

Drilling guide

KIG-221-1 and KIG-221-2
S00998

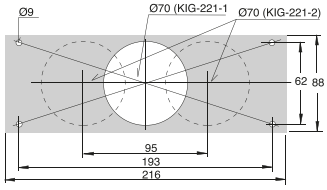

KIM 13-1 and KIM 13-2
S01389A

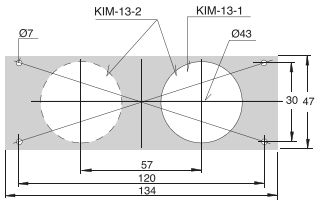

KIG-1 and KIG-2
S00995A

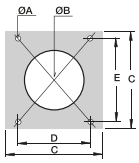

	øA	øB	C	D	E
KIG 1 (15-45 mm)	4,5	50	82	61	70,5
KIG 2 (20-65 mm)	5,5	70	100	61	85

Ordering information
Enclosure accessories

OEZXC11L
S01373A

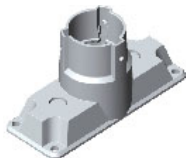

OEZXC12L
S01374A

YMF-MB10861SET
S01824A

YMF-MB10862SET
S01823A

OEZXB12L
S01372A

OEZXB11L
S01371A

YMF-MB10215
S00509A

YMF-MK10440
S00523A

L6
2CMC340002F0006

Cable flanges for plastic or steel sheet enclosures

Flange size	Outside diameter of cable [mm]	Knock-out of control cable [mm]	Type	Order number	Weight [kg]
II/C-flanges					
For cable entries from bottom. Mounting set, flange and cable gasket included.					
II / C	ø 30...55	2 x ø 20,5	OEZXC11L	1SCA022560R5570	0.40
II / C	2 x ø 30...60	2 x ø 20,5 + 2 x ø 10	OEZXC12L	1SCA022560R5730	0.53
Includes sealing gasket and fixing accessories					
II / C	2xM50 + 4xM20		YMF-MB10861SET	1SCA022715R9090	0.14
II / C	2xM32+2xM25+ 3xM20+2xM16		YMF-MB10862SET	1SCA022715R9170	0.12
I/B-flanges					
For cable entries from bottom. Mounting set, flange and cable gasket included (OEZXB).					
I / B	2 x ø 15...30	ø 12,5	OEZXB12L	1SCA022560R5140	0.12
I / B	ø 15...30	ø 12,5 + ø 20,5	OEZXB11L	1SCA022560R4920	0.10
I / B	Cover plate		YMF-MB10215	1SCA022191R2170	0.05
	Screw (plastic coated head) 4 pcs /cover plate		YMF-MB10345	1SCA010352R7030	
	Nut, 4 pcs /cover plate		FGNSUM6X	1SCA010234R6620	
I / B	Gasket for cover plate		YMF-MK10440	1SCA022660R7130	0.01

Other accessories for plastic enclosures

Description	Remarks	Type	Order number	Weight [kg]
Mounting lugs (set of 4pcs.)	Plastic, for wall mounting	YMF-MB10674	1SCA022229R0010	

Padlock unit suitable for all side operated switches

Description	Type	Order number	
Shackle for up to 6 padlocks	L6	2CMA144539R1000	

Ordering information
Enclosure accessories

ESKV20
S01778A

EMUG20
S01779A

EMSKV25/7
S01777A

EMMU25
S01780A

Compression glands, IP65

Thread	Cable DIA [mm]	Type	Order number	Weight [kg]
Plastic				
Compression glands				
M12	2-7	ESKV12	1SCA022715R5850	0.01
M16	4,5-10	ESKV16	1SCA022715R5930	0.01
M20	6-13	ESKV20	1SCA022715R6070	0.02
M25	9-17	ESKV25	1SCA022715R6150	0.02
M32	13-21	ESKV32	1SCA022715R6230	0.03
M40	14-28	ESKV40	1SCA022715R6310	0.06
M50	18-35	ESKV50	1SCA022715R6400	0.08
M63	34-48	ESKV63	1SCA022715R6580	0.10
Locking nuts				
Needed if the enclosure holes are not provided with threads				
M12		EMUG12	1SCA022715R8280	0.01
M16		EMUG16	1SCA022715R8360	0.01
M20		EMUG20	1SCA022715R8440	0.01
M25		EMUG25	1SCA022715R8520	0.01
M32		EMUG32	1SCA022715R8610	0.01
M40		EMUG40	1SCA022715R8790	0.01
M50		EMUG50	1SCA022715R8870	0.02
M63		EMUG63	1SCA022715R8950	0.02
Metallic				
Compression glands				
M12	3...6	EMSKV12/5	1SCA022722R2710	0.02
M16	5...9	EMSKV16/5	1SCA022722R2800	0.03
M20	9....13	EMSKV20/6	1SCA022722R2980	0.04
M25	11....16	EMSKV25/7	1SCA022722R3010	0.06
M32	14....21	EMSKV32/8	1SCA022722R3100	0.08
M40	19....27	EMSKV40/8	1SCA022722R3280	0.08
M50	24....35	EMSKV50/9	1SCA022722R3360	0.10
M63	32....42	EMSKV63/10	1SCA022722R3440	0.12
Locking nuts				
Needed if the enclosure holes are not provided with threads				
M12		EMMU12	1SCA022722R1910	0.01
M16		EMMU16	1SCA022722R2040	0.01
M20		EMMU20	1SCA022722R2120	0.02
M25		EMMU25	1SCA022722R2210	0.02
M32		EMMU32	1SCA022722R2390	0.03
M40		EMMU40	1SCA022722R2470	0.04
M50		EMMU50	1SCA022722R2550	0.05
M63		EMMU63	1SCA022722R2630	0.06

Ordering information
Enclosure accessories

KRM_/EPN_ (reducer)
S01865A

EPN_/KEM (expander)
S01866A

EADR_
S07123

YJTB3
S07150

Adapters for M-threads

Thread	Type	Order number	Weight [kg]
Plastic			
M16 to M12	KRM16/12	1SCA022749R6090	0.01
M20 to M12	KRM20/12	1SCA022749R6170	0.01
M25 to M12	KRM25/12	1SCA022749R6980	0.01
M25 to M32	EPN650M25/M32	1SCA101159R1001	0.01
M32 to M40	EPN650M32/M40	1SCA101160R1001	0.01
M50 to M32	EPN550M50/M32	1SCA114803R1001	0.02
M50 to M40	EPN550M50/M40	1SCA104355R1001	0.02
M50 to M63	KEM50/63	1SCA114809R1001	0.02
Metallic			
M20 to M12	EPN720M20/M12	1SCA114806R1001	0.02
M20 to M16	EPN720M20/16	1SCA114807R1001	0.02
M25 to M16	EPN720M25/M16	1SCA122555R1001	0.02
M25 to M20	EPN720M25/M20	1SCA109748R1001	0.02
M32 to M20	EPN720M32/M20	1SCA109749R1001	0.02
M40 to M25	EPN720M40/M25	1SCA114808R1001	0.02
M32 to M40	EPN740M32/M40	1SCA114810R1001	0.02

Gasket

Thread/hole dia	Type	Order number	Weight [kg]
M12/ø12,5	EADR12	1SCA114804R1001	0.01
M16/ø16.5	EADR16	1SCA022749R6410	0.01
M20/ø20.5	EADR20	1SCA022749R6500	0.01
M25/ø25.5	EADR25	1SCA022749R6680	0.01
M32/ø32.5	EADR32	1SCA101165R1001	0.01
M50/ø50.5	EADR50	1SCA104353R1001	0.01

Condensation water outlet IP44

Hole diameter [mm]	Type	Order number	Weight [kg]
10	YJTB3	1SCA122170R1001	0.025

Dimension drawings
Plastic enclosed switch-disconnectors

BW225....425, BW240..440

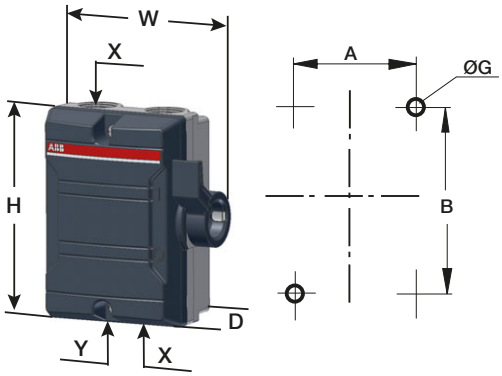

BW625...640

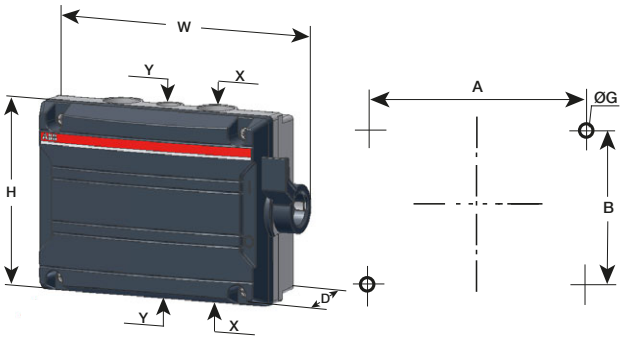

Side operated switch-disconnectors

Type	Size			Cable entry		Fixing dimensions		
	W	H	D	X	Y	A	B	G
2-pole, plastic enclosed switch-disconnectors								
BW225 DP	111	130	60	2xM25	-	64	90	5
BW225 W DP	111	130	60	2xM25	-	64	90	5
BW240 DP	138	168	68	2xM32	1xM16	90	127	5
3-pole, plastic enclosed switch-disconnectors								
BW325 W TPN	111	130	60	2xM25	-	64	90	5
BW325 TPN	111	130	60	2xM25	-	64	90	5
BW325 Y TPN	111	130	60	2xM25	-	64	90	5
BW325 L TPN	111	130	62	2xM25	-	64	90	5
BW325 K TPN	111	130	62	2xM25	-	64	90	5
BW340 TPN	138	168	68	2xM32	1xM16	90	127	5
4-pole, plastic enclosed switch-disconnectors								
BW425 TPSN	111	130	60	2xM25	-	64	90	5
BW440 TPSN	138	168	68	2xM32	1xM16	90	127	5
6-pole, plastic enclosed switch-disconnectors								
BW625 TPN	190	130	65	2xø25	ø16	124	90	5
BW640 TPN	190	130	65	2xø25	ø16	124	90	5

OTP16B_

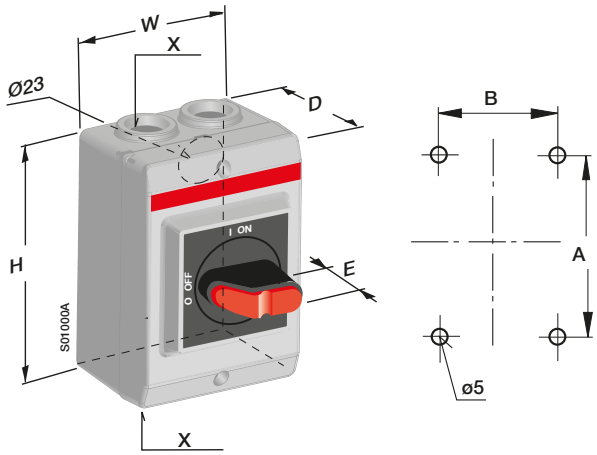

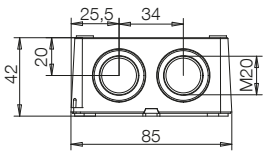

Front operated switch-disconnectors

Type	Size				Cable entry	Fixing dimensions	
	H	W	D	E	X	A	B
3-pole							
OTP16_3M	120	85	60	33	2xM20	105.5	70.5
OTP16_3M25	120	85	60	33	2xM25	105.5	70.5
OTP16_3P	120	85	60	33	2xPg16	105.5	70.5
OTP16_3U	120	85	60	33	-	105.5	70.5

Dimension drawings
Plastic enclosed switch-disconnectors

OTP16...125

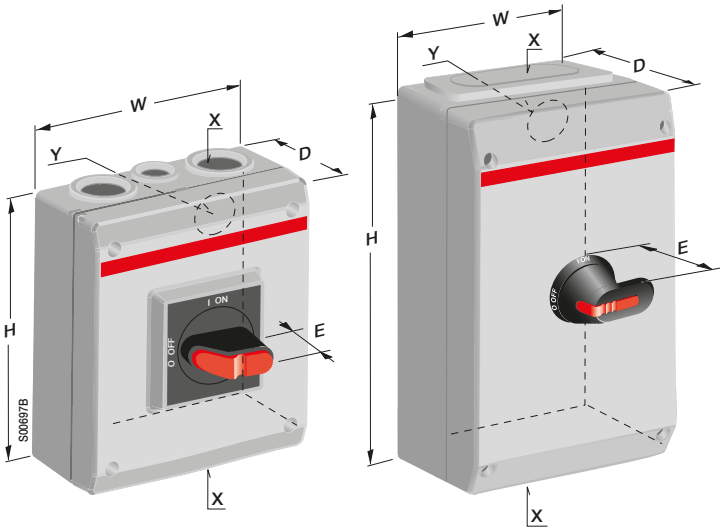

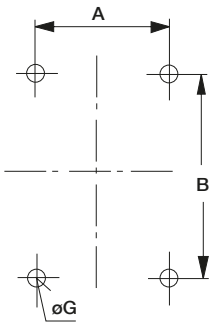

Front operated switch-disconnectors

Type	Size				Cable entry		Fixing dimensions		
	E	W	H	D	X	Y	A	B	G
3-pole									
OTP 25...32_ 3M	33	130	150	60	2xM25+M16	2Xø29+ø19	115	136	5
OTP 25...32_ 3P	33	130	150	60	2XPg21+Pg11	2Xø29+ø19	115	136	5
OTP 45...63_3M	33	145	200	90	2xM32+M16	2Xø38+ø19	129.5	182.5	5
OTP 45...63_3P	33	145	200	90	2xPg29+Pg11	2Xø38+ø19	129.5	182.5	5
OTP80...125_3B	33	200	400	140	I-flange	Blank	176	376	6
OTP80...125_3U	33	200	400	140	Blank	Blank	176	376	6
OTP100...125_3M	33	200	400	140	2xM50+M16	Blank	176	376	6
4-pole									
OTP 16...32_4M	33	130	150	60	2xM25+M16	2Xø29+ø19	115	136	5
OTP 16...32_4P	33	130	150	60	2XPg21+Pg11	2Xø29+ø19	115	136	5
OTP 45...63_4M	33	145	200	90	2xM32+M16	2Xø38+ø19	129.5	182.5	5
OTP 45...63_4P	33	145	200	90	2xPg29+Pg11	2Xø38+ø19	129.5	182.5	5
OTP80...125_4B	33	200	400	140	I-flange	Blank	176	376	6
OTP80...125_4U	33	200	400	140	Blank	Blank	176	376	6
OTP100...125_4M	33	200	400	140	2xM50+M16	Blank	176	376	6
6-pole									
OTP 16...32_ 6M	33	130	150	85	2xM25+M16	2Xø29+ø19	115	136	5
OTP 16...32_ 6P	33	130	150	85	2XPg21+Pg11	2Xø29+ø19	115	136	5
OTP 45...63_6M	45	145	200	90	2xM32+M16	2Xø38+ø19	129.5	182.5	5
OTP 45...63_6P	45	145	200	90	2xPg29+Pg11	2Xø38+ø19	129.5	182.5	5
OTP80...125_6B	45	200	400	140	I-flange	Blank	176	376	6
OTP80...125_6U	45	200	400	140	Blank	Blank	176	376	6
OTP125_6M	45	200	400	140	2xM50+M16	Blank	176	376	6

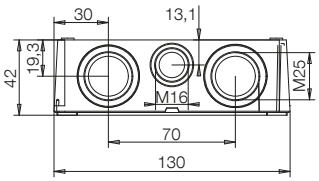

Type	X
OTP25...32_3M	2xM25+M16
OTP16...32_4M, 6M	2xM25+M16

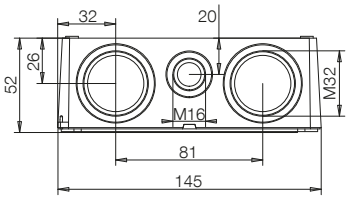

Type	X
OTP45...63_3M, 4M, 6M	2xM32+M16

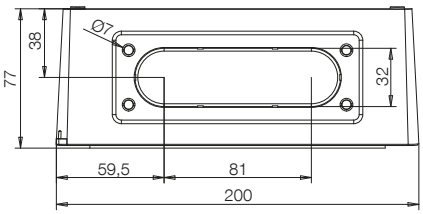

Type	X
OTP80...125_3B, 4B, 6B	I -flange

Dimension drawings
Plastic enclosed switch-disconnectors and switch fuses

OT160...800, OS32...400

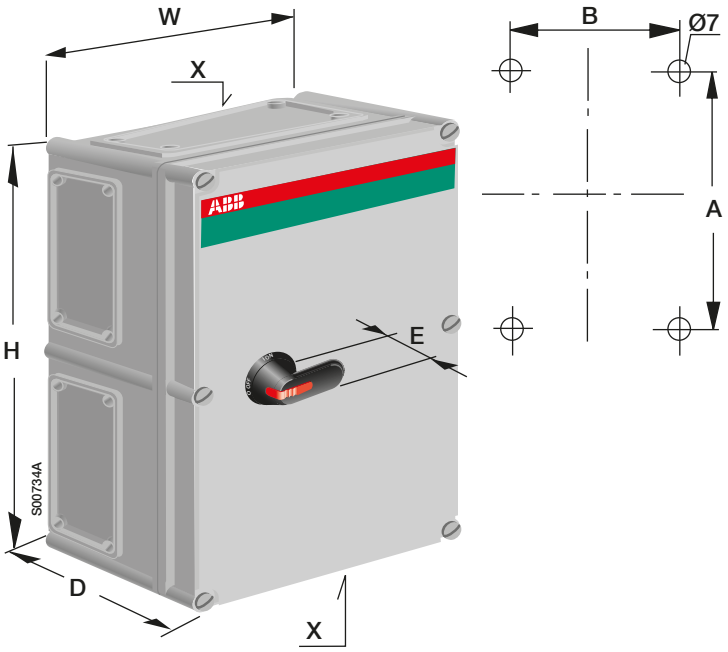

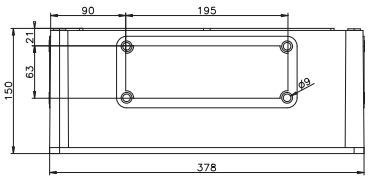

Type	
OT160...630	Flange II
OS32...200	Flange II
OS250, 3 pole	Flange II

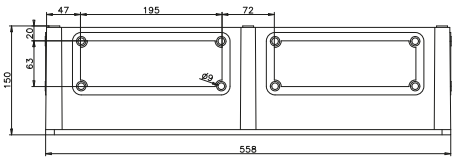

Type	
OT800	Flange 2xII
OS250, 4 pole	Flange 2xII
OS315...400	Flange 2xII

Front operated switch-disconnectors

Type	Size				Cable entry	Fixing dimensions	
	H	W	D	E	X	A	B
3- and 4-pole							
OT160EFCC_B	380	280	130	45	II	355	255
OT200KFCC_B	560	280	180	45	II	535	255
OT250KFCC_B	560	280	180	45	II	535	255
OT315KFCC_B	560	380	180	45	II	535	355
OT400DFCC_B	840	380	180	45	II	815	355
OT630KFCC_B	840	380	180	45	II	815	355
OT800KFCC_B	760	560	250	45	2xII	735	535

Front operated switch fuses

Type	Size				Cable entry	Fixing dimensions	
	H	W	D	E	X	A	B
BS-type							
OS32GA2FCC3B	190	280	180	45	II	165	255
OS32GA2FCC4B	190	280	180	45	II	165	255
OS63GA3FCC3B	190	280	180	45	II	165	255
OS63GA3FCC4B	190	280	180	45	II	165	255
OS100GA4FCC3B	380	280	180	45	II	355	255
OS100GA4FCC4B	380	280	180	45	II	355	255
OS200BB2FCC3B	560	380	280	45	II	535	355
OS200BB2FCC4B	560	380	280	45	II	535	355
OS315BB3FCC3B	760	560	250	45	2 x II	735	535
OS400BB3FCC3B	760	560	250	45	2 x II	735	535
DIN-type							
OS00-32A00FCC3B	190	280	180	45	II	165	255
OS00-32A00FCC4B	190	280	180	45	II	165	255
OS00-63A00FCC3B	190	280	180	45	II	165	255
OS00-63A00FCC4B	190	280	180	45	II	165	255
OS00A00FCC3B	380	280	180	45	II	355	255
OS00A00FCC4B	380	280	180	45	II	355	255
OS00-160A00FCC3B	560	380	180	45	II	535	355
OS00-160A00FCC4B	560	380	180	45	II	535	355
OS250D1FCC3B	560	380	280	45	II	535	355
OS250D1FCC4B	760	560	250	45	2 x II	735	535
OS400D2FCC3B	760	560	250	45	2 x II	735	535

Dimension drawings
Plastic enclosed DC-switch-disconnectors and switch fuses

OTDCP16...32, DC rated switch-disconnectors

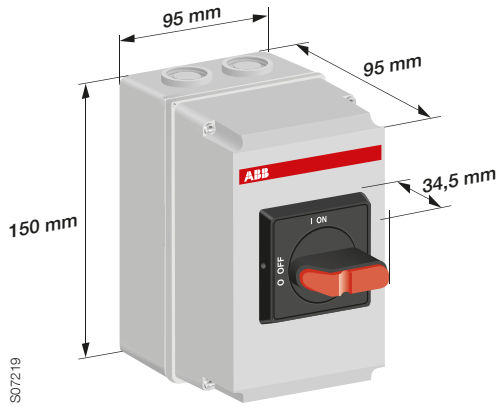

OS20...32

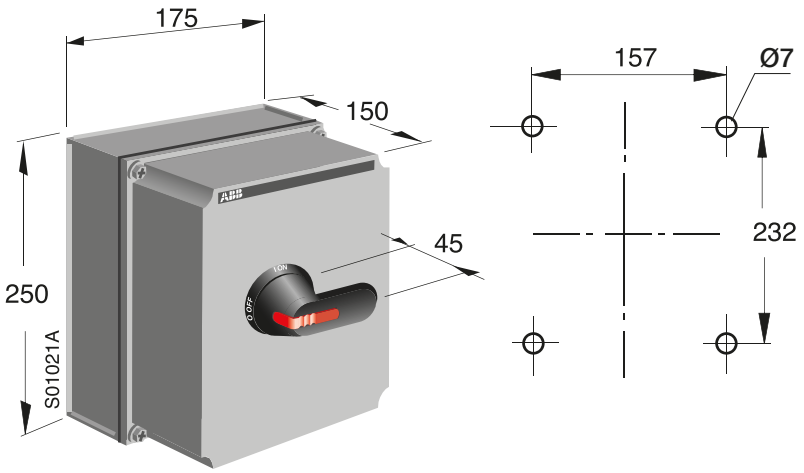

Front operated switch fuses

Type
OS20PA1FUU3B
OS20PA1FUU4B
OS32PA1FUU3B
OS32PA1FUU4B

Dimension drawings
Steel sheet enclosed switch-disconnectors, change-over switches and switch fuses

OT16...125, OT16...63_C, OS20...32

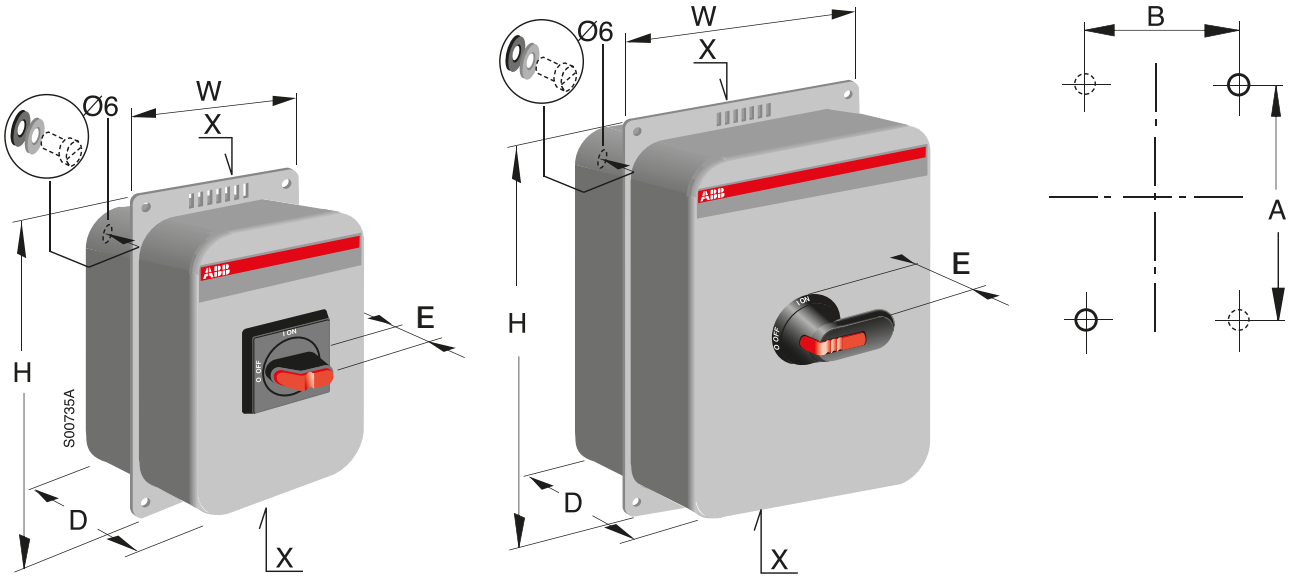

Fixing entry size in enclosure ø 6

Front operated switch-disconnectors

Type	Size				Cable entry	Fixing dimensions	
	H	W	D	E	X	A	B
3- and 4-pole							
OT16ELMM_B	240	162	110	34.5	2Xø20+ø16	144	92
OT25ELMM_B	240	162	110	34.5	2Xø25+ø16	144	92
OT32ELMM_B	240	162	110	34.5	2Xø25+ø16	144	92
OT45ELMM_B	240	162	110	34.5	2Xø32+ø16	144	92
OT63ELMM_B	240	162	110	34.5	2Xø32+ø16	144	92
OT80ELBB_B	350	233	140	34.5	B-flange	250	160
OT125ELBB_B	350	233	140	34.5	B-flange	250	160
6-pole							
OT16ELMM6BZ	350	233	140	34.5	2Xø25+ø16	250	160
OT25ELMM6BZ	350	233	140	34.5	2Xø25+ø16	250	160
OT32ELMM6BZ	350	233	140	34.5	2Xø25+ø16	250	160
OT45ELMM6BZ	350	233	140	34.5	2Xø32+ø16	250	160
OT63ELMM6BZ	350	233	140	34.5	2Xø32+ø16	250	160

Front operated change-over switches

Type	Size				Cable entry	Fixing dimensions	
	H	W	D	E	X	A	B
OT16ELMM3C	350	233	140	45	2Xø25+ø16	250	160
OT25ELMM3C	350	233	140	45	2Xø25+ø16	250	160
OT32ELMM3C	350	233	140	45	2Xø25+ø16	250	160
OT45ELMM3C	350	233	140	45	2Xø32+ø16	250	160
OT63ELMM3C	350	233	140	45	2Xø32+ø16	250	160

Front operated switch fuses

Type	Size				Cable entry	Fixing dimensions	
	H	W	D	E	X	A	B
OS20PA1LMM3B	350	233	140	45	2Xø20+ø16	250	160
OS20PA1LMM4B	350	233	140	45	2Xø20+ø16	250	160
OS32PA1LMM3B	350	233	140	45	2Xø20+ø16	250	160
OS32PA1LMM4B	350	233	140	45	2Xø20+ø16	250	160

Dimension drawings
Steel sheet / stainless steel sheet enclosed switch-disconnectors

OTL/OTR16...63

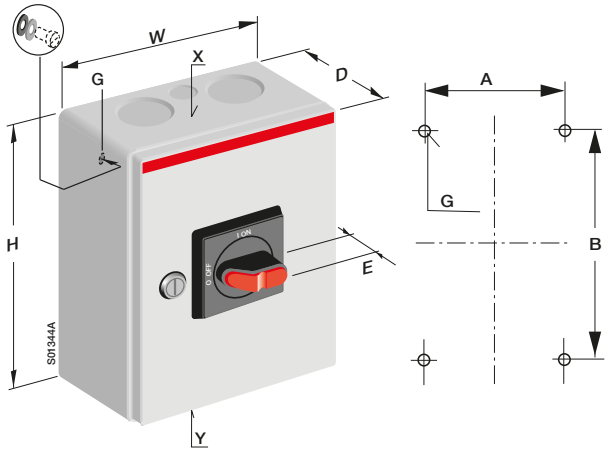

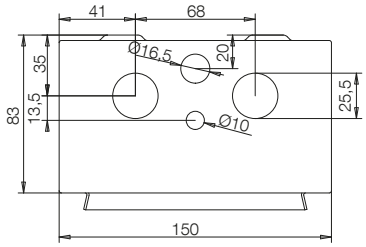

Type	Cable outlets
OTL/OTR16...32_3M, 4M, 6M	2xØ25.5+Ø16.5

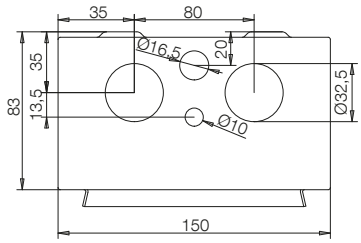

Type	Cable outlets
OTL/OTR45...63_3M, 4M	2xØ32.5+Ø16.5

Front operated switch-disconnectors

Type	Size				Cable entry		Fixing dimensions		
	E	W	H	D	X	Y	A	B	G
3-pole									
OTL/OTR16B_3M	33	150	200	100	2xø25,5+ø16,5	2xø25,5+ø16,5	80	130	6,6
OTL/OTR25B_3M	33	150	200	100	2xø25,5+ø16,5	2xø25,5+ø16,5	80	130	6,6
OTL/OTR32B_3M	33	150	200	100	2xø25,5+ø16,5	2xø25,5+ø16,5	80	130	6,6
OTL/OTR45B_3M	33	150	200	100	2xø32,5+ø16,5	2xø32,5+ø16,5	80	130	6,6
OTL/OTR63B_3M	33	150	200	100	2xø32,5+ø16,5	2xø32,5+ø16,5	80	130	6,6
4-pole									
OTL/OTR16B_4M	33	150	200	100	2xø25,5+ø16,5	2xø25,5+ø16,5	80	130	6,6
OTL/OTR25B_4M	33	150	200	100	2xø25,5+ø16,5	2xø25,5+ø16,5	80	130	6,6
OTL/OTR32B_4M	33	150	200	100	2xø25,5+ø16,5	2xø25,5+ø16,5	80	130	6,6
OTL/OTR45B_4M	33	150	200	100	2xø32,5+ø16,5	2xø32,5+ø16,5	80	130	6,6
OTL/OTR63B_4M	33	150	200	100	2xø32,5+ø16,5	2xø32,5+ø16,5	80	130	6,6
6-pole									
OTL/OTR16B_6M	33	150	200	100	2xø25,5+ø16,5	2xø25,5+ø16,5	80	130	6,6
OTL/OTR25B_6M	33	150	200	100	2xø25,5+ø16,5	2xø25,5+ø16,5	80	130	6,6
OTL/OTR32B_6M	33	150	200	100	2xø25,5+ø16,5	2xø25,5+ø16,5	80	130	6,6

Dimension drawings
Steel sheet / stainless steel sheet enclosed switch-disconnectors

OTL/OTR45...125

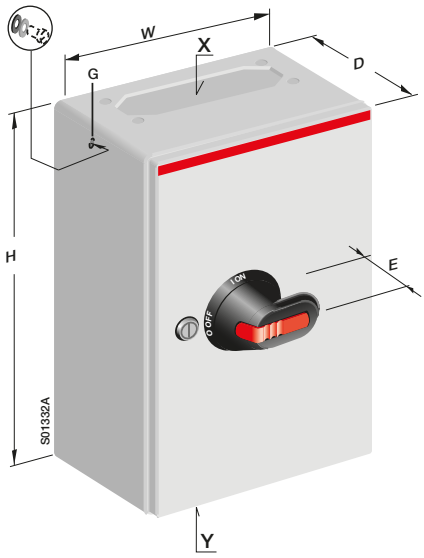

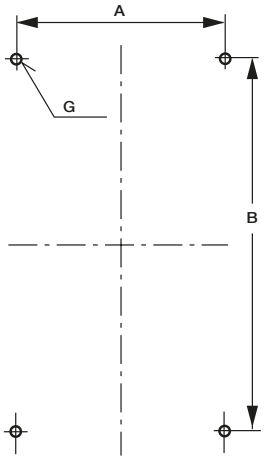

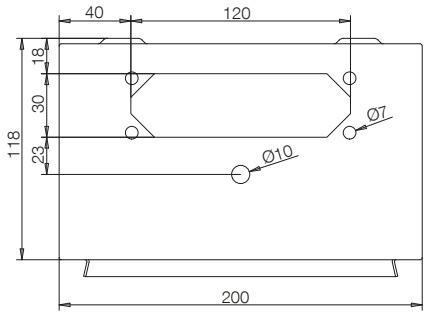

Type	Cable outlets
OTL/OTR100...125_3B, 4B	B-flange
OTL/OTR45...63_6B	B-flange

Front operated switch-disconnectors

Type	Size				Cable entry		Fixing dimensions		
	E	W	H	D	X	Y	A	B	G
3-pole									
OTL/OTR100B_3B	45	200	300	135	B-flange	B-flange	130	230	6,5
OTL/OTR100B_3U	45	200	300	135	Blank	Blank	130	230	6,5
OTL/OTR125B_3B	45	200	300	135	B-flange	B-flange	130	230	6,5
OTL/OTR125B_3U	45	200	300	135	Blank	Blank	130	230	6,5
4-pole									
OTL/OTR100B_4B	45	200	300	135	B-flange	B-flange	130	230	6,5
OTL/OTR100B_4U	45	200	300	135	Blank	Blank	130	230	6,5
OTL/OTR125B_4B	45	200	300	135	B-flange	B-flange	130	230	6,5
OTL/OTR125B_4U	45	200	300	135	Blank	Blank	130	230	6,5
6-pole									
OTL/OTR45B_6B	45	200	300	135	B-flange	B-flange	130	230	6,5
OTL/OTR45B_6U	45	200	300	135	Blank	Blank	130	230	6,5
OTL/OTR63B_6B	45	200	300	135	B-flange	B-flange	130	230	6,5
OTL/OTR63B_6U	45	200	300	135	Blank	Blank	130	230	6,5

Dimension drawings
Steel sheet enclosed switch-disconnectors and change-over switches

OT125...1600, OT160...800_C

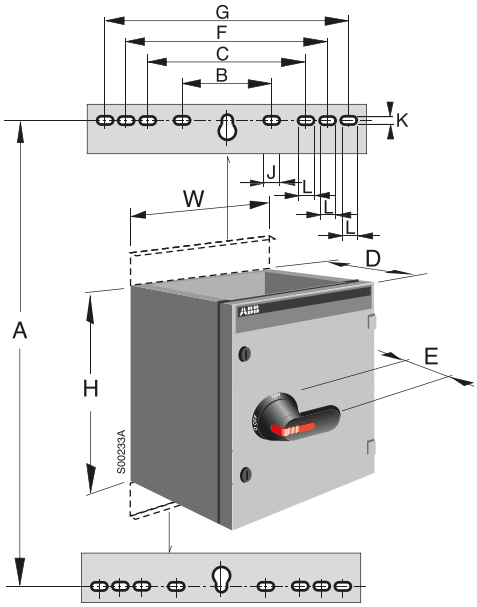

MSC enclosure

Front operated switch-disconnectors

Type	Size				Fixing dimensions					Fixing holes		
	H	W	D	E	A	B	C	F	G	J	K	L
3- and 4-pole, switch-disconnectors												
OT125AL_	400	250	180	45	445	162	-	-	-	27	11	-
OT160EL_	600	250	180	45	445	162	-	-	-	27	11	-
OT200KL_	600	400	230	45	645	303	-	-	-	35	11	-
OT250KL_	600	400	230	45	645	303	-	-	-	35	11	-
OT315KL_	600	400	230	45	645	303	-	-	-	35	11	-
OT400DL_	800	400	230	45	845	303	-	-	-	35	11	-
OT630KL_	1000	400	230	45	1045	303	-	-	-	35	11	-
OT800KL_	1000	400	230	45	1045	303	-	-	-	35	11	-
OT1000KL_	1200	800	230	45	1045	303	512	612	712	35	11	27
OT1250KL_	1200	800	330	45	1045	303	512	612	712	35	11	27
OT1600KL_	1200	800	330	45	1045	303	512	612	712	35	11	27
6-pole, switch-disconnectors												
OT125AL_	400	400	230	45	445	303	-	-	-	35	11	-
OT160EL_	400	400	230	45	445	303	-	-	-	35	11	-
OT200KL_	600	800	230	45	645	303	-	-	-	35	11	-
OT250KL_	800	800	230	45	845	303	-	-	-	35	11	-
OT315KL_	800	800	230	45	845	303	-	-	-	35	11	-
OT400DL_	800	800	230	45	845	303	-	-	-	35	11	-
OT630KL_	1000	800	230	45	1045	303	512	612	712	35	11	27
OT800KL_	1000	800	230	45	1045	303	512	612	712	35	11	27

Front operated change-over switches

Type	Size				Fixing dimensions					Fixing holes		
	H	W	D	E	A	B	C	F	G	J	K	L
OT160KL_C	600	400	230	45	645	303	-	-	-	35	11	-
OT200KL_C	600	400	230	45	645	303	-	-	-	35	11	-
OT250KL_C	600	400	230	45	845	303	-	-	-	35	11	27
OT315KL_C	800	400	330	45	845	303	-	-	-	35	11	27
OT400DL_C	800	400	330	45	845	303	-	-	-	35	11	27
OT630KL_C	1000	800	330	45	1045	303	512	612	712	35	11	27
OT800KL_C	1000	800	330	45	1045	303	512	612	712	35	11	

Dimension drawings
Steel sheet enclosed switch fuses

OS20...800

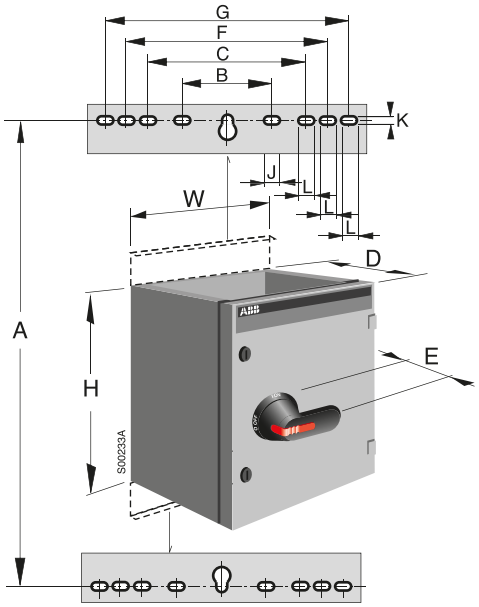

MSC enclosure

Front operated switch fuses

Type	Size				Fixing dimensions					Fixing holes		
BS-type	H	W	D	E	A	B	C	F	G	J	K	L
2-, 3-, and 4-pole												
OS20PA1LUU_	400	250	180	45	445	162	-	-	-	27	11	-
OS32PA1LUU_	400	250	180	45	445	162	-	-	-	27	11	-
OS32GA3LUU_	400	250	180	45	445	162	-	-	-	27	11	-
OS63GA3LUU_	400	250	180	45	445	162	-	-	-	27	11	-
OS100GA4LUU_	400	250	180	45	445	162	-	-	-	27	11	-
OS160BB2LUU_	600	400	230	45	645	303	-	-	-	35	11	-
OS200BB2LUU_	600	400	330	45	645	303	-	-	-	35	11	-
OS315BB3LUU_	800	400	330	45	845	303	-	-	-	35	11	-
OS400BB4LUU_	800	400	330	45	845	303	-	-	-	35	11	-
OS630BC2LUU2FZ	1000	400	330	45	1045	303	-	-	-	35	11	-
OS630BC2LUU3FZ	1000	800	330	45	1045	303	512	612	712	35	11	27
OS630BC2LUU4FZ	1000	800	330	45	1045	303	512	612	712	35	11	27
OS800BC2LUU2FZ	1000	400	330	45	1045	303	-	-	-	35	11	-
OS800BC2LUU3FZ	1000	800	330	45	1045	303	512	612	712	35	11	27
OS800BC2LUU4FZ	1000	800	330	45	1045	303	512	612	712	35	11	27

Type	Size				Fixing dimensions					Fixing holes		
DIN-type	H	W	D	E	A	B	C	F	G	J	K	L
3- and 4-pole												
OS00-32A00LAA_	400	250	180	45	445	162	-	-	-	27	11	-
OS00-63A00LAA_	400	250	180	45	445	162	-	-	-	27	11	-
OS00A00LAA_	400	250	180	45	445	162	-	-	-	27	11	-
OS00-160A00LAA_	600	400	230	45	645	303	-	-	-	35	11	-
OS250DILAA_	800	400	330	45	845	303	-	-	-	35	11	-
OS400D2LAA_	800	400	330	45	845	303	-	-	-	35	11	-
OS630D3LAA3B_	1000	800	330	45	1045	303	512	612	712	35	11	27
OS630D3LAA4B_	1000	800	330	45	1045	303	512	612	712	35	11	27
OS800D3LAA_	1000	800	330	45	1045	303	512	612	712	35	11	27

Dimension drawings
Steel sheet enclosed safety switches

OT125...1600, OT160...800_C and OS20...800_, cable entries

OEZXP24R

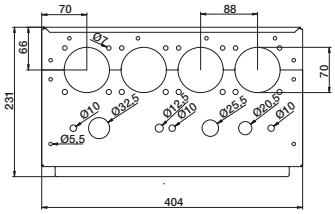

OEZXP120C

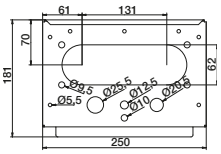

OEZXP34R

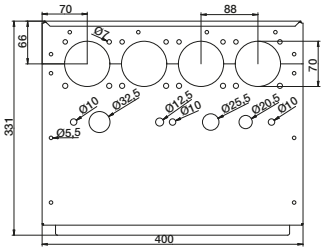

OEZXP240C

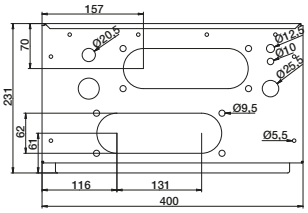

OEZXP28R

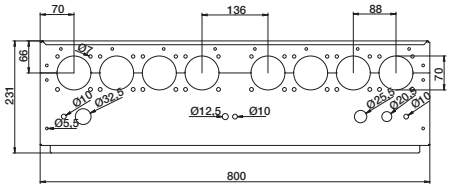

OEZXP340C

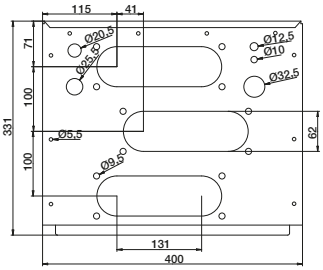

OEZXP38R

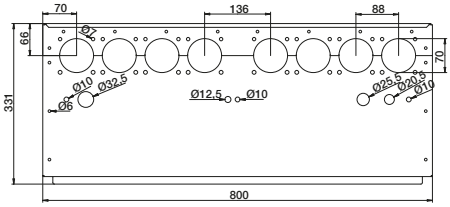

OEZXP280C

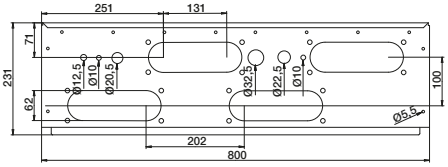

OEZXP380C

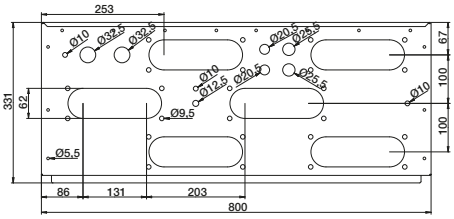

Dimension drawings
Aluminum enclosed switch-disconnectors

KSE225...440

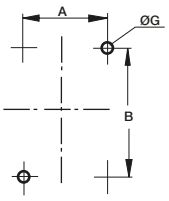

Side operated switch-disconnectors

Type	Size			Cable entry		Fixing dimensions		
	W	H	D	X	Y	A	B	G
2 pole-Aluminum enclosed switch-disconnectors								
KSE225 DP	111	130	60	2xM25	-	64	90	5
KSE240 DP	138	168	68	2xM25	1xM16	90	127	5
3 pole-Aluminum enclosed switch-disconnectors								
KSE325 TPN	111	130	60	2xM25	-	64	90	5
KSE340 TPN	138	168	68	2xM32	1xM16	90	127	5
4 pole-Aluminum enclosed switch-disconnectors								
KSE425 TPSN	111	130	60	2xM25	-	64	90	5
KSE440 TPSN	138	168	68	2xM32	1xM16	90	127	5

KSF325...440

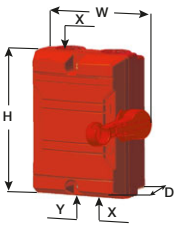

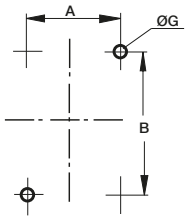

Fireman's switches

Type	Size			Cable entry		Fixing dimensions		
	W	H	D	X	Y	A	B	G
2 pole-Fireman switch, side operated in Aluminum								
KSF225 DP	111	130	60	2xM25	-	64	90	5
3 pole-Fireman switch, side operated in Aluminum								
KSF325 TPN	111	130	60	2xM25	-	64	90	5
KSF325 TPN NO	111	130	60	2xM25	-	64	90	5
KSF340 TPN	138	168	68	2xM32	1xM16	90	127	5
4 pole-Fireman switch, side operated in Aluminum								
KSF425 TPSN	111	130	60	2xM25	-	64	90	5
KSF440 TPSN	138	168	68	2xM32	1xM16	90	127	5

KSE263...4100

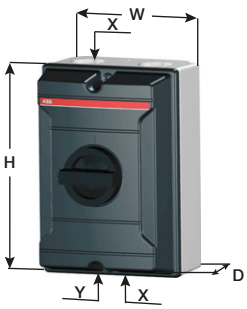

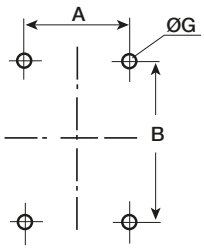

Front operated switch-disconnectors

Type	Size			Cable entry		Fixing dimensions		
	W	H	D	X	Y	A	B	G
3 pole-Enclosed switch-disconnector, front operated in Aluminum								
KSE363 - 3125	160	230	145	2xM40	1xM16	124	190	5.3
4 pole-Enclosed switch-disconnector, front operated in Aluminum								
KSE463 - 480	160	230	145	2xM40	1xM16	124	190	5.3

KSE3160

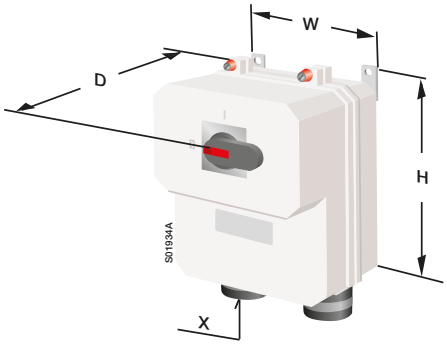

KSE3250...3630

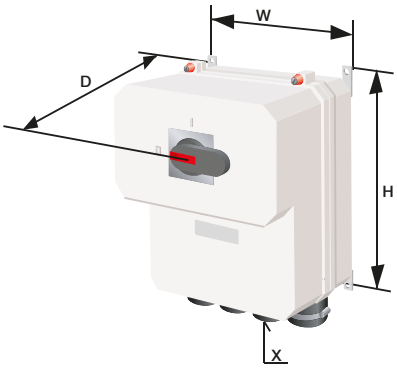

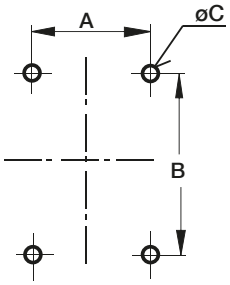

Front operated switch-disconnectors

Type	H	W	D	X	A	B	C
					min/max	min/max	
KSE3160	405	400	234	2xØ18-48	340/414	331/405	8
KSE3250/3315	555	465	322	4xØ30-68	395/490	485/580	10
KSE3500/3630	655	565	322	4xØ30-68	495/590	585/680	10

Accessories
Auxiliary contacts/Enclosed switches

Type	Auxiliary contacts incl. in standard delivery	Auxiliary contacts max.	Auxiliary contact/ type to add NO	NC	NO or NO+NC
KSF225 DP	-	1no or 1nc	OBEA10[2)]	OBEA01[2)]	
KSF325 TPN	-	1no or 1nc	OBEA10[2)]	OBEA01[2)]	
KSF325 TPN NO	1no	1no or 1nc	OBEA10[2)]	OBEA01[2)]	
KSF425 TPSN	-	1no or 1nc	OBEA10[2)]	OBEA01[2)]	
KSF340 TPN	-	1no or 1nc	OBEA10[2)]	OBEA01[2)]	
KSF440 TPSN	-	1no or 1nc	OBEA10[2)]	OBEA01[2)]	
KSE 225 DP	-	1no or 1nc	OBEA10[2)]	OBEA01[2)]	
KSE 325 TPN	-	1no or 1nc	OBEA10[2)]	OBEA01[2)]	
KSE 425 TPSN	-	1no or 1nc	OBEA10[2)]	OBEA01[2)]	
KSE 240 DP	-	1no or 1nc	OBEA10[2)]	OBEA01[2)]	
KSE 340 TPN	-	1no or 1nc	OBEA10[2)]	OBEA01[2)]	
KSE 440 TPSN	-	1no or 1nc	OBEA10[2)]	OBEA01[2)]	
KSE363 D/TPN	-	1no or 1nc	OA1G10	OA3G01	
KSE363 TPN	-	1no or 1nc	OA1G10	OA3G01	
KSE463 TPN	-	1no or 1nc	OA1G10	OA3G01	
KSE380 TPN	-	1no or 1nc	OA1G10	OA3G01	
KSE480 TPN	-	1no or 1nc	OA1G10	OA3G01	
KSE3125 TPN	-	1no or 1nc	OA1G10	OA3G01	
KSE 3160	-	1no or 1nc	OA1G10	OA3G01	
KSE 3250	-	1no or 1nc	OBEA10[2)]	OBEA01[2)]	
KSE 3315	-	1no or 1nc	OBEA10[2)]	OBEA01[2)]	
KSE 3500	-	1no or 1nc	OBEA10[2)]	OBEA01[2)]	
KSE 3630	-	1no or 1nc	OBEA10[2)]	OBEA01[2)]	
OS20PA1FUU3B	-	1no+1nc	OA1G10	OA3G01	
OS20PA1FUU4B	-	1no+1nc	OA1G10	OA3G01	
OS00-32A00FCC3B	-	1no+1nc	OA1G10	OA3G01	
OS00-32A00FCC4B	-	1no+1nc	OA1G10	OA3G01	
OS32GA3FCC3B	-	1no+1nc	OA1G10	OA3G01	
OS32GA3FCC4B	-	1no+1nc	OA1G10	OA3G01	
OS32PA1FUU3B	-	1no+1nc	OA1G10	OA3G01	
OS32PA1FUU4B	-	1no+1nc	OA1G10	OA3G01	
OS00-63A00FCC3B	-	1no+1nc	OA1G10	OA3G01	
OS00-63A00FCC4B	-	1no+1nc	OA1G10	OA3G01	
OS63GA3FCC3B	-	1no+1nc	OA1G10	OA3G01	
OS63GA3FCC4B	-	1no+1nc	OA1G10	OA3G01	
OS00A00FCC3B	-	1no+1nc	OA1G10	OA3G01	
OS00A00FCC4B	-	1no+1nc	OA1G10	OA3G01	
OS100GA4FCC3B	-	1no+1nc	OA1G10	OA3G01	
OS100GA4FCC4B	-	1no+1nc	OA1G10	OA3G01	
OS00-160A00FCC3B	-	1no+1nc	OA1G10	OA3G01	
OS00-160A00FCC4B	-	1no+1nc	OA1G10	OA3G01	
OS200BB2FCC3B	-	3no+1nc	OA1G10	OA3G01	
OS200BB2FCC4B	-	3no+1nc	OA1G10	OA3G01	
OS250D1FCC3B	-	3no+1nc	OA1G10	OA3G01	
OS250D1FCC4B	-	3no+1nc	OA1G10	OA3G01	
OS315BB3FCC3B	-	3no+1nc	OA1G10	OA3G01	
OS400BB4FCC3B	-	3no+1nc	OA1G10	OA3G01	
OS400D2FCC3B	-	3no+1nc	OA1G10	OA3G01	
OS400D2FCC4B	-	3no+1nc	OA1G10	OA3G01	
BW316 TPN	-	1no or 1nc	OBEA10[2)]	OBEA01[2)]	
OTP16B3M	-	1no+1nc	OA1G10	OA1G01	
OTP16B3M25	-	1no+1nc	OA1G10	OA1G01	
OTP16B3P	-	1no+1nc	OA1G10	OA1G01	
OTP16B4M	-	2no+2nc	OA1G10	OA1G01	
OTP16B4P	-	2no+2nc	OA1G10	OA1G01	
OTP16B6M	-	1no+1nc	OA1G10	OA1G01	

Type	Auxiliary contacts incl. in standard delivery	Auxiliary contacts max.	Auxiliary contact/ type to add NO	NC	NO or NO+NC
OTP16B6M	-	2no	OA1G10	-	OA7G10
OTP16BA3M	-	1no+1nc	OA1G10	OA1G01	
OTP16BA3M25	-	1no+1nc	OA1G10	OA1G01	
OTP16BA3MS	-	1no+1nc	OA1G10	OA1G01	
OTP16BA3P	-	1no+1nc	OA1G10	OA1G01	
OTP16BA4M	-	2no+2nc	OA1G10	OA1G01	
OTP16BA4MS	-	2no+2nc	OA1G10	OA1G01	
OTP16BA4P	-	2no+2nc	OA1G10	OA1G01	
OTP16BA6M	-	1no+1nc	OA1G10	OA1G01	
OTP16BA6M	-	2no	OA1G10	-	OA7G10
OTP16BA6P	-	1no+1nc	OA1G10	OA1G01	
OTP16BA6P	-	2no	OA1G10	-	OA7G10
OTP16BA8MS	-	1no+1nc	OA1G10	OA1G01	
OTP16HB3M	-	1no+1nc	OA1G10	OA1G01	
OTP16HB3M25	-	1no+1nc	OA1G10	OA1G01	
OTP16HB3P	-	1no+1nc	OA1G10	OA1G01	
OTP16HB3U	-	1no+1nc	OA1G10	OA1G01	
BW225 DP	-	1no or 1nc	OBEA10[2)]	OBEA01[2)]	
BW225 W/DP	-	1no or 1nc	OBEA10[2)]	OBEA01[2)]	
BW325 K/TPN	-	1no or 1nc	OBEA10[2)]	OBEA01[2)]	
BW325 L/TPN	-	1no or 1nc	OBEA10[2)]	OBEA01[2)]	
BW325 TPN	-	1no or 1nc	OBEA10[2)]	OBEA01[2)]	
BW325 W/TPN	-	1no or 1nc	OBEA10[2)]	OBEA01[2)]	
BW325 Y/TPN	-	1no or 1nc	OBEA10[2)]	OBEA01[2)]	
BW425 TPSN	-	1no or 1nc	OBEA10[2)]	OBEA01[2)]	
BW425 Y/TPSN	-	1no or 1nc	OBEA10[2)]	OBEA01[2)]	
BW625 TPN	-	1no or 1nc	OBEA10[2)]	OBEA01[2)]	
OTP25B3M	-	2no+2nc	OA1G10	OA1G01	
OTP25B3P	-	2no+2nc	OA1G10	OA1G01	
OTP25B4M	-	2no+2nc	OA1G10	OA1G01	
OTP25B4P	-	2no+2nc	OA1G10	OA1G01	
OTP25B6M	-	1no+1nc	OA1G10	OA1G01	
OTP25B6M	-	2no	OA1G10	-	OA7G10
OTP25B6P	-	1no+1nc	OA1G10	OA1G01	
OTP25B6P	-	2no	OA1G10	-	OA7G10
OTP25BA3M	-	2no+2nc	OA1G10	OA1G01	
OTP25BA3P	-	2no+2nc	OA1G10	OA1G01	
OTP25BA4M	-	2no+2nc	OA1G10	OA1G01	
OTP25BA4P	-	2no+2nc	OA1G10	OA1G01	
OTP25BA6M	-	1no+1nc	OA1G10	OA1G01	
OTP25BA6M	-	2no	OA1G10	-	
OTP25BA6P	-	1no+1nc	OA1G10	OA1G01	
OTP25BA6P	-	2no	OA1G10	-	
OTP32B3M	-	2no+2nc	OA1G10	OA1G01	
OTP32B3P	-	2no+2nc	OA1G10	OA1G01	
OTP32B4M	-	2no+2nc	OA1G10	OA1G01	
OTP32B4P	-	2no+2nc	OA1G10	OA1G01	
OTP32B6M	-	1no+1nc	OA1G10	OA1G01	
OTP32B6M	-	2no	OA1G10	-	
OTP32B6P	-	1no+1nc	OA1G10	OA1G01	
OTP32B6P	-	2no	OA1G10	-	
OTP32BA3M	-	2no+2nc	OA1G10	OA1G01	
OTP32BA3MS	-	2no+2nc	(OA1G10)	OA1G01	
OTP32BA3P	-	2no+2nc	OA1G10	OA1G01	
OTP32BA4M	-	2no+2nc	OA1G10	OA1G01	
OTP32BA4P	-	2no+2nc	OA1G10	OA1G01	

Type	Auxiliary contacts incl. in standard delivery	Auxiliary contacts max.	Auxiliary contact/ type to add NO	NC	NO or NO+NC
OTP32BA6M	-	1no+1nc	OA1G10	OA1G01	
OTP32BA6M	-	2no	OA1G10	-	
OTP32BA8MS	-	1no+1nc	OA1G10	OA1G01	
BW240 DP	-	1no or 1nc	OBEA10[2)]	OBEA01[2)]	
BW340 TPN	-	1no or 1nc	OBEA10[2)]	OBEA01[2)]	
BW340 Y/TPN	-	1no or 1nc	OBEA10[2)]	OBEA01[2)]	
BW440 TPSN	-	1no or 1nc	OBEA10[2)]	OBEA01[2)]	
BW440 Y/TPSN	-	1no or 1nc	OBEA10[2)]	OBEA01[2)]	
BW640 TPN	-	1no or 1nc	OBEA10[2)]	OBEA01[2)]	
OTP45B3M	-	2no+2nc	OA1G10	OA1G01	
OTP45B3P	-	2no+2nc	OA1G10	OA1G01	
OTP45B4M	-	2no+2nc	OA1G10	OA1G01	
OTP45B4P	-	2no+2nc	OA1G10	OA1G01	
OTP45B6M	-	1no+1nc	OA1G10	OA1G01	
OTP45B6M	-	2no	OA1G10	-	
OTP45B6P	-	1no+1nc	OA1G10	OA1G01	
OTP45B6P	-	2no	OA1G10	-	
OTP45BA3M	-	2no+2nc	OA1G10	OA1G01	
OTP45BA3P	-	2no+2nc	OA1G10	OA1G01	
OTP45BA4M	-	2no+2nc	OA1G10	OA1G01	
OTP45BA4P	-	2no+2nc	OA1G10	OA1G01	
OTP45BA6M	-	1no+1nc	OA1G10	OA1G01	
OTP45BA6M	-	2no	OA1G10	-	
OTP45BA6P	-	1no+1nc	OA1G10	OA1G01	
OTP45BA6P	-	2no	OA1G10	-	
OTP63B3M	-	2no+2nc	OA1G10	OA1G01	
OTP63B3P	-	2no+2nc	OA1G10	OA1G01	
OTP63B4M	-	2no+2nc	OA1G10	OA1G01	
OTP63B4P	-	2no+2nc	OA1G10	OA1G01	
OTP63B6M	-	1no+1nc	OA1G10	OA1G01	
OTP63B6M	-	2no	OA1G10	-	
OTP63B6P	-	1no+1nc	OA1G10	OA1G01	
OTP63B6P	-	2no	OA1G10	-	
OTP63BA3M	-	2no+2nc	OA1G10	OA1G01	
OTP63BA3P	-	2no+2nc	OA1G10	OA1G01	
OTP63BA4M	-	2no+2nc	OA1G10	OA1G01	
OTP63BA4P	-	2no+2nc	OA1G10	OA1G01	
OTP63BA6M	-	1no+1nc	OA1G10	OA1G01	
OTP63BA6M	-	2no	OA1G10	-	
OTP63BA6P	-	1no+1nc	OA1G10	OA1G01	
OTP63BA6P	-	2no	OA1G10	-	
OTP125B3B	-	2no+2nc	OA1G10	OA1G01	
OTP125B3M	-	2no+2nc	OA1G10	OA1G01	
OTP125B3U	-	2no+2nc	OA1G10	OA1G01	
OTP125B4B	-	2no+2nc	OA1G10	OA1G01	
OTP125B4M	-	2no+2nc	OA1G10	OA1G01	
OTP125B4U	-	2no+2nc	OA1G10	OA1G01	
OTP125B6B	-	2no+2nc	OA1G10	OA1G01	
OTP125B6B	-	2no	OA1G10	-	
OTP125B6M	-	2no+2nc	OA1G10	OA1G01	
OTP125B6M	-	2no	OA1G10	-	
OTP125B6U	-	2no+2nc	OA1G10	OA1G01	
OTP125B6U	-	2no	OA1G10	-	
OTP125BA3B	-	2no+2nc	OA1G10	OA1G01	
OTP125BA3M	-	2no+2nc	OA1G10	OA1G01	
OTP125BA3U	-	2no+2nc	OA1G10	OA1G01	
OTP125BA4B	-	2no+2nc	OA1G10	OA1G01	
OTP125BA4M	-	2no+2nc	OA1G10	OA1G01	
OTP125BA4U	-	2no+2nc	OA1G10	OA1G01	
OTP125BA6B	-	2no+2nc	OA1G10	OA1G01	
OTP125BA6B	-	2no	OA1G10	-	
OTP125BA6M	-	2no+2nc	OA1G10	OA1G01	
OTP125BA6M	-	2no	OA1G10	-	
OTP125BA6U	-	2no+2nc	OA1G10	OA1G01	
OT160EFCC3B	-	2no+2nc	OBEA10[2)]	OBEA01[2)]	
OT160EFCC3BA	-	2no+2nc	OBEA10[2)]	OBEA01[2)]	
OT160EFCC4B	-	2no+2nc	OBEA10[2)]	OBEA01[2)]	
OT160EFCC4BA	-	2no+2nc	OBEA10[2)]	OBEA01[2)]	

Type	Auxiliary contacts incl. in standard delivery	Auxiliary contacts max.	Auxiliary contact/ type to add NO	NC	NO or NO+NC
OT200KFCC3B	-	2no+2nc	OA1G10	OA3G01	
OT200KFCC3BA	-	2no+2nc	OA1G10	OA3G01	
OT250KFCC3B	-	2no+2nc	OA1G10	OA3G01	
OT250KFCC3BA	-	2no+2nc	OA1G10	OA3G01	
OT250KFCC4B	-	2no+2nc	OA1G10	OA3G01	
OT250KFCC4BA	-	2no+2nc	OA1G10	OA3G01	
OT315KFCC3B	-	2no+2nc	OA1G10	OA3G01	
OT315KFCC3BA	-	2no+2nc	OA1G10	OA3G01	
OT315KFCC4B	-	2no+2nc	OA1G10	OA3G01	
OT315KFCC4BA	-	2no+2nc	OA1G10	OA3G01	
OT400DFCC3B	-	2no+2nc	OA1G10	OA3G01	
OT400DFCC3BA	-	2no+2nc	OA1G10	OA3G01	
OT400DFCC4B	-	2no+2nc	OA1G10	OA3G01	
OT400DFCC4BA	-	2no+2nc	OA1G10	OA3G01	
OT630KFCC3B	-	2no+2nc	OA1G10	OA3G01	
OT630KFCC3BA	-	2no+2nc	OA1G10	OA3G01	
OT630KFCC4B	-	2no+2nc	OA1G10	OA3G01	
OT630KFCC4BA	-	2no+2nc	OA1G10	OA3G01	
OT800KFCC3B	-	2no+2nc	OA1G10	OA3G01	
OT800KFCC3BA	-	2no+2nc	OA1G10	OA3G01	
OT800KFCC4B	-	2no+2nc	OA1G10	OA3G01	
OT800KFCC4BA	-	2no+2nc	OA1G10	OA3G01	
OTR16B3M	-	2no+2nc	-	OA1G01	OA2G11
OTR16B4M	-	2no+2nc	OA1G10	OA1G01	OA2G11
OTR16B6M	-	-	-	-	
OTR16BA3M	-	2no+2nc	-	OA1G01	OA2G11
OTR16BA4M	-	2no+2nc	OA1G10	OA1G01	OA2G11
OTR16BA6M	-	-	-	-	
OTR25B3M	-	2no+2nc	-	OA1G01	OA2G11
OTR25B4M	-	2no+2nc	OA1G10	OA1G01	OA2G11
OTR25B6M	-	-	-	-	
OTR25BA3M	-	2no+2nc	-	OA1G01	OA2G11
OTR25BA4M	-	2no+2nc	OA1G10	OA1G01	OA2G11
OTR25BA6M	-	-	-	-	
OTR32B3M	-	2no+2nc	-	OA1G01	OA2G11
OTR32B4M	-	2no+2nc	OA1G10	OA1G01	OA2G11
OTR32B6M	-	-	-	-	
OTR32BA3M	-	2no+2nc	-	OA1G01	OA2G11
OTR32BA4M	-	2no+2nc	OA1G10	OA1G01	OA2G11
OTR32BA6M	-	-	-	-	
OTR45B3M	-	2no+2nc	OA1G10	OA1G01	OA2G11[1)]
OTR45B4M	-	2no+2nc	OA1G10	OA1G01	OA2G11
OTR45B6B	-	1no+1nc	OA1G10	OA1G01	
OTR45B6B	-	2no	OA1G10	-	OA7G10
OTR45B6U	-	1no+1nc	OA1G10	OA1G01	
OTR45B6U	-	2no	OA1G10	-	OA7G10
OTR45BA3M	-	2no+2nc	OA1G10	OA1G01	OA2G11[1)]
OTR45BA4M	-	2no+2nc	OA1G10	OA1G01	OA2G11
OTR45BA6B	-	1no+1nc	OA1G10	OA1G01	
OTR45BA6B	-	2no	OA1G10	-	OA7G10
OTR45BA6U	-	1no+1nc	OA1G10	OA1G01	
OTR45BA6U	-	2no	OA1G10	-	OA7G10
OTR63B3M	-	2no+2nc	OA1G10	OA1G01	OA2G11[1)]
OTR63B4M	-	2no+2nc	OA1G10	OA1G01	OA2G11
OTR63B6B	-	1no+1nc	OA1G10	OA1G01	
OTR63B6B	-	2no	OA1G10	-	OA7G10
OTR63B6U	-	1no+1nc	OA1G10	OA1G01	
OTR63B6U	-	2no	OA1G10	-	OA7G10
OTR63BA3M	-	2no+2nc	OA1G10	OA1G01	OA2G11[1)]
OTR63BA4M	-	2no+2nc	OA1G10	OA1G01	OA2G11
OTR63BA6B	-	1no+1nc	OA1G10	OA1G01	
OTR63BA6B	-	2no	OA1G10	-	OA7G10
OTR63BA6U	-	1no+1nc	OA1G10	OA1G01	
OTR63BA6U	-	2no	OA1G10	-	OA7G10
OTR100B3B	-	2no+2nc	OA1G10	OA1G01	OA2G11[1)]
OTR100B3U	-	2no+2nc	OA1G10	OA1G01	OA2G11[1)]
OTR100B4B	-	2no+2nc	OA1G10	OA1G01	OA2G11
OTR100B4U	-	2no+2nc	OA1G10	OA1G01	OA2G11

Type	Auxiliary contacts incl. in standard delivery	Auxiliary contacts max.	Auxiliary contact/ type to add NO	NC	NO or NO+NC
OTR100BA3B	-	2no+2nc	OA1G10	OA1G01	OA2G11[1)]
OTR100BA3U	-	2no+2nc	OA1G10	OA1G01	OA2G11[1)]
OTR125B3B	-	2no+2nc	OA1G10	OA1G01	OA2G11[1)]
OTR125B3U	-	2no+2nc	OA1G10	OA1G01	OA2G11[1)]
OTR125B4B	-	2no+2nc	OA1G10	OA1G01	OA2G11
OTR125B4U	-	2no+2nc	OA1G10	OA1G01	OA2G11
OTR125BA3B	-	2no+2nc	OA1G10	OA1G01	OA2G11[1)]
OTR125BA3U	-	2no+2nc	OA1G10	OA1G01	OA2G11[1)]
OTR125BA4B	-	2no+2nc	OA1G10	OA1G01	OA2G11
OTR125BA4U	-	2no+2nc	OA1G10	OA1G01	OA2G11
OT16ELMM3C	-	-	-	-	
OT16ELPP3C	-	-	-	-	
OT25ELMM3C	-	-	-	-	
OT25ELPP3C	-	-	-	-	
OT32ELMM3C	-	-	-	-	
OT32ELPP3C	-	-	-	-	
OT45ELMM3C	-	1no+1nc	OA1G10	OA1G01	
OT45ELMM3C		2no	OA1G10	-	OA7G10
OT45ELPP3C	-	1no+1nc	OA1G10	OA1G01	
OT45ELPP3C		2no	OA1G10	-	OA7G10
OT63ELMM3C	-	1no+1nc	OA1G10	OA1G01	
OT63ELMM3C		2no	OA1G10	-	OA7G10
OT63ELPP3C	-	1no+1nc	OA1G10	OA1G01	
OT63ELPP3C		2no	OA1G10	-	OA7G10
OT160ELAA3C	-	2no+2nc	OBEA102)	OBEA01[2)]	
OT160ELAA4C	-	2no+2nc	OBEA102)	OBEA01[2)]	
OT200KLAA3C	-	2no+2nc	OA1G10	OA3G01	
OT200KLAA4C	-	2no+2nc	OA1G10	OA3G01	
OT250KLAA3C	-	2no+2nc	OA1G10	OA3G01	
OT250KLAA4C	-	2no+2nc	OA1G10	OA3G01	
OT315KLAA3C	-	2no+2nc	OA1G10	OA3G01	
OT315KLAA4C	-	2no+2nc	OA1G10	OA3G01	
OT400DLAA3C	-	2no+2nc	OA1G10	OA3G01	
OT400DLAA4C	-	2no+2nc	OA1G10	OA3G01	
OT630KLAA3C	-	2no+2nc	OA1G10	OA3G01	
OT630KLAA4C	-	2no+2nc	OA1G10	OA3G01	
OT800KLAA3C	-	2no+2nc	OA1G10	OA3G01	
OT800KLAA4C	-	2no+2nc	OA1G10	OA3G01	
OS20PA1LMM3B	-	1no+1nc	OA1G10	OA3G01	
OS20PA1LMM4B	-	1no+1nc	OA1G10	OA3G01	
OS20PA1LUU3FZ	-	1no+1nc	OA1G10	OA3G01	
OS20PA1LUU4FZ	-	1no+1nc	OA1G10	OA3G01	
OS00-32A00LAA3B	-	1no+1nc	OA1G10	OA3G01	
OS00-32A00LAA3BZ	-	1no+1nc	OA1G10	OA3G01	
OS00-32A00LAA4B	-	1no+1nc	OA1G10	OA3G01	
OS00-32A00LAA4BZ	-	1no+1nc	OA1G10	OA3G01	
OS32GA3LUU2FZ	-	1no+1nc	OA1G10	OA3G01	
OS32GA3LUU3FZ	-	1no+1nc	OA1G10	OA3G01	
OS32GA3LUU4FZ	-	1no+1nc	OA1G10	OA3G01	
OS32PA1LMM3B	-	1no+1nc	OA1G10	OA3G01	
OS32PA1LMM4B	-	1no+1nc	OA1G10	OA3G01	
OS32PA1LUU3FZ	-	1no+1nc	OA1G10	OA3G01	
OS32PA1LUU4FZ	-	1no+1nc	OA1G10	OA3G01	
OS00-63A00LAA3B	-	1no+1nc	OA1G10	OA3G01	
OS00-63A00LAA3BZ	-	1no+1nc	OA1G10	OA3G01	
OS00-63A00LAA4B	-	1no+1nc	OA1G10	OA3G01	
OS00-63A00LAA4BZ	-	1no+1nc	OA1G10	OA3G01	
OS630D3LAA4BZ	-	3no+1nc	OA1G10	OA3G01	
OS63GA3LUU2FZ	-	1no+1nc	OA1G10	OA3G01	
OS63GA3LUU3FZ	-	1no+1nc	OA1G10	OA3G01	
OS63GA3LUU4FZ	-	1no+1nc	OA1G10	OA3G01	
OS00A00LAA3B	-	1no+1nc	OA1G10	OA3G01	
OS00A00LAA3BZ	-	1no+1nc	OA1G10	OA3G01	
OS00A00LAA4B	-	1no+1nc	OA1G10	OA3G01	
OS00A00LAA4BZ	-	1no+1nc	OA1G10	OA3G01	
OS100GA4LUU2FZ	-	1no+1nc	OA1G10	OA3G01	
OS100GA4LUU3FZ	-	1no+1nc	OA1G10	OA3G01	
OS100GA4LUU4FZ	-	1no+1nc	OA1G10	OA3G01	

Type	Auxiliary contacts incl. in standard delivery	Auxiliary contacts max.	Auxiliary contact/ type to add NO	NC	NO or NO+NC
OS00-160A00LAA3B	-	1no+1nc	OA1G10	OA3G01	
OS00-160A00LAA3BZ	-	1no+1nc	OA1G10	OA3G01	
OS160BB2LUU2FZ	-	1no+1nc	OA1G10	OA3G01	
OS160BB2LUU3FZ	-	1no+1nc	OA1G10	OA3G01	
OS160BB2LUU4FZ	-	1no+1nc	OA1G10	OA3G01	
OS200BB2LUU2FZ	-	3no+1nc	OA1G10	OA3G01	
OS200BB2LUU3FZ	-	3no+1nc	OA1G10	OA3G01	
OS200BB2LUU4FZ	-	3no+1nc	OA1G10	OA3G01	
OS250D1LAA3B	-	3no+1nc	OA1G10	OA3G01	
OS250D1LAA3BZ	-	3no+1nc	OA1G10	OA3G01	
OS250D1LAA4B	-	3no+1nc	OA1G10	OA3G01	
OS250D1LAA4BZ	-	3no+1nc	OA1G10	OA3G01	
OS315BB3LUU2FZ	-	3no+1nc	OA1G10	OA3G01	
OS315BB3LUU3FZ	-	3no+1nc	OA1G10	OA3G01	
OS315BB3LUU4FZ	-	3no+1nc	OA1G10	OA3G01	
OS400BB4LUU2FZ	-	3no+1nc	OA1G10	OA3G01	
OS400BB4LUU3FZ	-	3no+1nc	OA1G10	OA3G01	
OS400BB4LUU4FZ	-	3no+1nc	OA1G10	OA3G01	
OS400D2LAA3B	-	3no+1nc	OA1G10	OA3G01	
OS400D2LAA3BZ	-	3no+1nc	OA1G10	OA3G01	
OS400D2LAA4B	-	3no+1nc	OA1G10	OA3G01	
OS400D2LAA4BZ	-	3no+1nc	OA1G10	OA3G01	
OS630BC2LUU2FZ	-	3no+1nc	OA1G10	OA3G01	
OS630BC2LUU3FZ	-	3no+1nc	OA1G10	OA3G01	
OS630BC2LUU4FZ	-	3no+1nc	OA1G10	OA3G01	
OS630D3LAA3B	-	3no+1nc	OA1G10	OA3G01	
OS630D3LAA3BZ	-	3no+1nc	OA1G10	OA3G01	
OS630D3LAA4B	-	3no+1nc	OA1G10	OA3G01	
OS800BC3LUU2FZ	-	3no+1nc	OA1G10	OA3G01	
OS800BC3LUU3FZ	-	3no+1nc	OA1G10	OA3G01	
OS800BC3LUU4FZ	-	3no+1nc	OA1G10	OA3G01	
OS800D3LAA3B	-	3no+1nc	OA1G10	OA3G01	
OS800D3LAA3BZ	-	3no+1nc	OA1G10	OA3G01	
OS800D3LAA4B	-	3no+1nc	OA1G10	OA3G01	
OS800D3LAA4BZ	-	3no+1nc	OA1G10	OA3G01	
OT16ELMM3B	-	2no+2nc	-	OA1G01	OA2G11
OT16ELMM3BZ	-	2no+2nc	-	OA1G01	OA2G11
OT16ELMM4B	-	2no+2nc	OA1G10	OA1G01	OA2G11
OT16ELMM4BZ	-	2no+2nc	OA1G10	OA1G01	OA2G11
OT16ELMM6BZ	-	-	-	-	
OTL16B3M	-	2no+2nc	-	OA1G01	OA2G11
OTL16B4M	-	2no+2nc	OA1G10	OA1G01	OA2G11
OTL16B6M	-	-	-	-	
OTL16BA3M	-	2no+2nc	-	OA1G01	OA2G11
OTL16BA4M	-	2no+2nc	OA1G10	OA1G01	OA2G11
OTL16BA6M	-	-	-	-	
OT25ELMM3B	-	2no+2nc	-	OA1G01	OA2G11
OT25ELMM3BZ	-	2no+2nc	-	OA1G01	OA2G11
OT25ELMM4B	-	2no+2nc	OA1G10	OA1G01	OA2G11
OT25ELMM4BZ	-	2no+2nc	OA1G10	OA1G01	OA2G11
OT25ELMM6BZ	-	-	-	-	
OTL25B3M	-	2no+2nc	-	OA1G01	OA2G11
OTL25B4M	-	2no+2nc	OA1G10	OA1G01	OA2G11
OTL25B6M	-	-	-	-	
OTL25BA3M	-	2no+2nc	-	OA1G01	OA2G11
OTL25BA4M	-	2no+2nc	OA1G10	OA1G01	OA2G11
OTL25BA6M	-	-	-	-	
OT32ELMM3B	-	2no+2nc	-	OA1G01	OA2G11
OT32ELMM3BZ	-	2no+2nc	-	OA1G01	OA2G11
OT32ELMM4B	-	2no+2nc	OA1G10	OA1G01	OA2G11
OT32ELMM4BZ	-	2no+2nc	OA1G10	OA1G01	OA2G11
OT32ELMM6BZ	-	-	-	-	
OTL32B3M	-	2no+2nc	-	OA1G01	OA2G11
OTL32B4M	-	2no+2nc	OA1G10	OA1G01	OA2G11
OTL32B6M	-	-	-	-	
OTL32BA3M	-	2no+2nc	-	OA1G01	OA2G11
OTL32BA4M	-	2no+2nc	OA1G10	OA1G01	OA2G11
OTL32BA6M	-	-	-	-	

Type	Auxiliary contacts incl. in standard delivery	Auxiliary contacts max.	Auxiliary contact/ type to add NO	NC	NO or NO+NC
OT45ELMM3B	-	2no+2nc	OA1G10	OA1G01	OA2G11[1]
OT45ELMM3BZ	-	2no+2nc	OA1G10	OA1G01	OA2G11[1]
OT45ELMM6BZ	-	1no+1nc	OA1G10	OA1G01	
OT45ELMM6BZ	-	2no	OA1G10	-	OA7G10
OTL45B3M	-	2no+2nc	OA1G10	OA1G01	OA2G11[1]
OTL45B4M	-	2no+2nc	OA1G10	OA1G01	OA2G11
OTL45B6B	-	1no+1nc	OA1G10	OA1G01	
OTL45B6B	-	2no	OA1G10	-	OA7G10
OTL45B6U	-	1no+1nc	OA1G10	OA1G01	
OTL45B6U	-	2no	OA1G10	-	OA7G10
OTL45BA3M	-	2no+2nc	OA1G10	OA1G01	OA2G11[1]
OTL45BA4M	-	2no+2nc	OA1G10	OA1G01	OA2G11
OTL45BA6B	-	1no+1nc	OA1G10	OA1G01	
OTL45BA6B	-	2no	OA1G10	-	OA7G10
OTL45BA6U	-	1no+1nc	OA1G10	OA1G01	
OTL45BA6U	-	2no	OA1G10	-	OA7G10
OT63ELMM3B	-	2no+2nc	OA1G10	OA1G01	OA2G11[1]
OT63ELMM3BZ	-	2no+2nc	OA1G10	OA1G01	OA2G11[1]
OT63ELMM4B	-	2no+2nc	OA1G10	OA1G01	OA2G11
OT63ELMM4BZ	-	2no+2nc	OA1G10	OA1G01	OA2G11
OT63ELMM6BZ	-	1no+1nc	OA1G10	OA1G01	
OT63ELMM6BZ	-	2no	OA1G10	-	OA7G10
OTL63B3M	-	2no+2nc	OA1G10	OA1G01	OA2G11[1]
OTL63B4M	-	2no+2nc	OA1G10	OA1G01	OA2G11
OTL63B6B	-	1no+1nc	OA1G10	OA1G01	
OTL63B6B	-	2no	OA1G10	-	OA7G10
OTL63B6U	-	1no+1nc	OA1G10	OA1G01	
OTL63B6U	-	2no	OA1G10	-	OA7G10
OTL63BA3M	-	2no+2nc	OA1G10	OA1G01	OA2G11[1]
OTL63BA4M	-	2no+2nc	OA1G10	OA1G01	OA2G11
OTL63BA6B	-	1no+1nc	OA1G10	OA1G01	
OTL63BA6B	-	2no	OA1G10	-	OA7G10
OTL63BA6U	-	1no+1nc	OA1G10	OA1G01	
OTL63BA6U	-	2no	OA1G10	-	OA7G10
OTL100B3B	-	2no+2nc	OA1G10	OA1G01	OA2G11[1]
OTL100B3U	-	2no+2nc	OA1G10	OA1G01	OA2G11[1]
OTL100B4B	-	2no+2nc	OA1G10	OA1G01	OA2G11
OTL100B4U	-	2no+2nc	OA1G10	OA1G01	OA2G11
OTL100BA3B	-	2no+2nc	OA1G10	OA1G01	OA2G11[1]
OTL100BA3U	-	2no+2nc	OA1G10	OA1G01	OA2G11[1]
OTL100BA4B	-	2no+2nc	OA1G10	OA1G01	OA2G11
OTL100BA4U	-	2no+2nc	OA1G10	OA1G01	OA2G11
OT125ALAA3B	-	2no+2nc	OBEA10[2]	OBEA01[2]	
OT125ALAA3BZ	-	2no+2nc	OBEA10[2]	OBEA01[2]	
OT125ALAA4B	-	2no+2nc	OBEA10[2]	OBEA01[2]	
OT125ALAA4BZ	-	2no+2nc	OBEA10[2]	OBEA01[2]	
OT125ALAA6BZ	-	2no+2nc	OBEA10[2]	OBEA01[2]	
OT125ALUU3BZ	-	2no+2nc	OBEA10[2]	OBEA01[2]	
OT125ALUU4BZ	-	2no+2nc	OBEA10[2]	OBEA01[2]	
OT125ALUU6BZ	-	2no+2nc	OBEA10[2]	OBEA01[2]	
OT125ELBB3B	-	2no+2nc	OA1G10	OA1G01	
OT125ELBB3BZ	-	2no+2nc	OA1G10	OA1G01	
OT125ELBB4B	-	2no+2nc	OA1G10	OA1G01	
OT125ELBB4BZ	-	2no+2nc	OA1G10	OA1G01	
OTL125B3B	-	2no+2nc	OA1G10	OA1G01	OA2G11[1]
OTL125B3U	-	2no+2nc	OA1G10	OA1G01	OA2G11[1]
OTL125B4B	-	2no+2nc	OA1G10	OA1G01	OA2G11
OTL125B4U	-	2no+2nc	OA1G10	OA1G01	OA2G11
OTL125BA3B	-	2no+2nc	OA1G10	OA1G01	OA2G11[1]
OTL125BA3U	-	2no+2nc	OA1G10	OA1G01	OA2G11[1]
OTL125BA4B	-	2no+2nc	OA1G10	OA1G01	OA2G11
OTL125BA4U	-	2no+2nc	OA1G10	OA1G01	OA2G11
OT160ELAA3B	-	2no+2nc	OBEA10[2]	OBEA01[2]	
OT160ELAA3BZ	-	2no+2nc	OBEA10[2]	OBEA01[2]	
OT160ELAA4B	-	2no+2nc	OBEA10[2]	OBEA01[2]	
OT160ELAA4BZ	-	2no+2nc	OBEA10[2]	OBEA01[2]	
OT160ELAA6BZ	-	2no+2nc	OBEA10[2]	OBEA01[2]	
OT160ELUU3BZ	-	2no+2nc	OBEA10[2]	OBEA01[2]	
OT160ELUU4BZ	-	2no+2nc	OBEA10[2]	OBEA01[2]	
OT160ELUU6BZ	-	2no+2nc	OBEA10[2]	OBEA01[2]	
OT200KLAA4B	-	2no+2nc	OA1G10	OA3G01	
OT200KLAA4BZ	-	2no+2nc	OA1G10	OA3G01	
OT200KLAA6BZ	-	2no+2nc	OA1G10	OA3G01	
OT200KLUU3BZ	-	2no+2nc	OA1G10	OA3G01	
OT200KLUU4BZ	-	2no+2nc	OA1G10	OA3G01	
OT200KLUU6BZ	-	2no+2nc	OA1G10	OA3G01	
OT250KLAA3B	-	2no+2nc	OA1G10	OA3G01	
OT250KLAA3BZ	-	2no+2nc	OA1G10	OA3G01	
OT250KLAA4B	-	2no+2nc	OA1G10	OA3G01	
OT250KLAA4BZ	-	2no+2nc	OA1G10	OA3G01	
OT250KLAA6BZ	-	2no+2nc	OA1G10	OA3G01	
OT250KLUU3BZ	-	2no+2nc	OA1G10	OA3G01	
OT250KLUU4BZ	-	2no+2nc	OA1G10	OA3G01	
OT250KLUU6BZ	-	2no+2nc	OA1G10	OA3G01	
OT315KLAA3B	-	2no+2nc	OA1G10	OA3G01	
OT315KLAA3BZ	-	2no+2nc	OA1G10	OA3G01	
OT315KLAA4B	-	2no+2nc	OA1G10	OA3G01	
OT315KLAA4BZ	-	2no+2nc	OA1G10	OA3G01	
OT315KLAA6BZ	-	2no+2nc	OA1G10	OA3G01	
OT315KLUU3BZ	-	2no+2nc	OA1G10	OA3G01	
OT315KLUU4BZ	-	2no+2nc	OA1G10	OA3G01	
OT315KLUU6BZ	-	2no+2nc	OA1G10	OA3G01	
OT400DLAA3B	-	2no+2nc	OA1G10	OA3G01	
OT400DLAA3BZ	-	2no+2nc	OA1G10	OA3G01	
OT400DLAA4B	-	2no+2nc	OA1G10	OA3G01	
OT400DLAA4BZ	-	2no+2nc	OA1G10	OA3G01	
OT400DLAA6BZ	-	2no+2nc	OA1G10	OA3G01	
OT400DLUU3BZ	-	2no+2nc	OA1G10	OA3G01	
OT400DLUU4BZ	-	2no+2nc	OA1G10	OA3G01	
OT400DLUU6BZ	-	2no+2nc	OA1G10	OA3G01	
OT630KLAA3B	-	2no+2nc	OA1G10	OA3G01	
OT630KLAA3BZ	-	2no+2nc	OA1G10	OA3G01	
OT630KLAA4B	-	2no+2nc	OA1G10	OA3G01	
OT630KLAA4BZ	-	2no+2nc	OA1G10	OA3G01	
OT630KLAA6BZ	-	2no+2nc	OA1G10	OA3G01	
OT630KLUU3BZ	-	2no+2nc	OA1G10	OA3G01	
OT630KLUU4BZ	-	2no+2nc	OA1G10	OA3G01	
OT630KLUU6BZ	-	2no+2nc	OA1G10	OA3G01	
OT800KLAA3B	-	2no+2nc	OA1G10	OA3G01	
OT800KLAA3BZ	-	2no+2nc	OA1G10	OA3G01	
OT800KLAA4B	-	2no+2nc	OA1G10	OA3G01	
OT800KLAA4BZ	-	2no+2nc	OA1G10	OA3G01	
OT800KLAA6BZ	-	2no+2nc	OA1G10	OA3G01	
OT800KLUU3BZ	-	2no+2nc	OA1G10	OA3G01	
OT800KLUU4BZ	-	2no+2nc	OA1G10	OA3G01	
OT800KLUU6BZ	-	2no+2nc	OA1G10	OA3G01	
OT1000KLAA3B	-	2no+2nc	OA1G10	OA3G01	
OT1000KLAA3BZ	-	2no+2nc	OA1G10	OA3G01	
OT1000KLAA4B	-	2no+2nc	OA1G10	OA3G01	
OT1000KLAA4BZ	-	2no+2nc	OA1G10	OA3G01	
OT1000KLUU3BZ	-	2no+2nc	OA1G10	OA3G01	
OT1250KLAA3B	-	2no+2nc	OA1G10	OA3G01	
OT1250KLAA3BZ	-	2no+2nc	OA1G10	OA3G01	
OT1250KLAA4B	-	2no+2nc	OA1G10	OA3G01	
OT1250KLAA4BZ	-	2no+2nc	OA1G10	OA3G01	
OT1250KLUU3BZ	-	2no+2nc	OA1G10	OA3G01	
OT1600KLAA3B	-	2no+2nc	OA1G10	OA3G01	
OT1600KLAA3BZ	-	2no+2nc	OA1G10	OA3G01	
OT1600KLAA4B	-	2no+2nc	OA1G10	OA3G01	
OT1600KLAA4BZ	-	2no+2nc	OA1G10	OA3G01	
OT1600KLUU3BZ	-	2no+2nc	OA1G10	OA3G01	

[1] OA2G11 is mountable on the switch side without neutral block
[2] Adapter OEZNP1 needed

Index

Type	Order number	Description	Page
BW225 DP	2CMA142400R1000	Plastic enclosed switch-disconnector	12
BW225 W/DP	2CMA142401R1000	Plastic enclosed switch-disconnector	12
BW240 DP	2CMA142407R1000	Plastic enclosed switch-disconnector	12
BW316 TPN	2CMA142447R1000	Plastic enclosed switch-disconnector	13
BW325 K/TPN	2CMA142443R1000	Plastic enclosed switch-disconnector	13
BW325 L/TPN	2CMA142404R1000	Plastic enclosed switch-disconnector	13
BW325 TPN	2CMA142403R1000	Plastic enclosed switch-disconnector	13
BW325 W/TPN	2CMA142402R1000	Plastic enclosed switch-disconnector	13
BW325 Y/TPN	2CMA142441R1000	Plastic enclosed switch-disconnector	18
BW340 Y/TPN	2CMA142445R1000	Plastic enclosed switch-disconnector	18
BW425 TPSN	2CMA142405R1000	Plastic enclosed switch-disconnector	14
BW425 Y/TPSN	2CMA142444R1000	Plastic enclosed switch-disconnector	18
BW440 TPSN	2CMA142409R1000	Plastic enclosed switch-disconnector	14
BW440 Y/TPSN	2CMA142446R1000	Plastic enclosed switch-disconnector	18
BW625 TPN	2CMA142406R1000	Plastic enclosed switch-disconnector	14
BW640 TPN	2CMA142410R1000	Plastic enclosed switch-disconnector	14
EADR12	1SCA114804R1001	Adapter for M-thread	59
EADR16	1SCA022749R6410	Adapter for M-thread	59
EADR20	1SCA022749R6500	Adapter for M-thread	59
EADR25	1SCA022749R6680	Adapter for M-thread	59
EADR32	1SCA101165R1001	Adapter for M-thread	59
EADR50	1SCA104353R1001	Adapter for M-thread	59
EMMU12	1SCA022722R1910	Compression gland	58
EMMU16	1SCA022722R2040	Compression gland	58
EMMU20	1SCA022722R2120	Compression gland	58
EMMU25	1SCA022722R2210	Compression gland	58
EMMU32	1SCA022722R2390	Compression gland	58
EMMU40	1SCA022722R2470	Compression gland	58
EMMU50	1SCA022722R2550	Compression gland	58
EMMU63	1SCA022722R2630	Compression gland	58
EMSKV12/5	1SCA022722R2710	Compression gland	58
EMSKV16/5	1SCA022722R2800	Compression gland	58
EMSKV20/6	1SCA022722R2980	Compression gland	58
EMSKV25/7	1SCA022722R3010	Compression gland	58
EMSKV32/8	1SCA022722R3100	Compression gland	58
EMSKV40/8	1SCA022722R3280	Compression gland	58
EMSKV50/9	1SCA022722R3360	Compression gland	58
EMSKV63/10	1SCA022722R3440	Compression gland	58
EMUG12	1SCA022715R8280	Compression gland	58
EMUG16	1SCA022715R8360	Compression gland	58
EMUG20	1SCA022715R8440	Compression gland	58
EMUG25	1SCA022715R8520	Compression gland	58
EMUG32	1SCA022715R8610	Compression gland	58
EMUG40	1SCA022715R8790	Compression gland	58
EMUG50	1SCA022715R8870	Compression gland	58
EMUG63	1SCA022715R8950	Compression gland	58
EPN550M50/M32	1SCA114803R1001	Adapter for M-thread	59
EPN550M50/M40	1SCA104355R1001	Adapter for M-thread	59
EPN650M25/M32	1SCA101159R1001	Adapter for M-thread	59
EPN650M32/M40	1SCA101160R1001	Adapter for M-thread	59
EPN720M20/16	1SCA114807R1001	Adapter for M-thread	59
EPN720M20/M12	1SCA114806R1001	Adapter for M-thread	59
EPN720M25/M16	1SCA122555R1001	Adapter for M-thread	59
EPN720M25/M20	1SCA109748R1001	Adapter for M-thread	59
EPN720M32/M20	1SCA109749R1001	Adapter for M-thread	59
EPN720M40/M25	1SCA114808R1001	Adapter for M-thread	59
EPN740M32/M40	1SCA114810R1001	Adapter for M-thread	59
ESKV12	1SCA022715R5850	Compression gland	58
ESKV16	1SCA022715R5930	Compression gland	58
ESKV20	1SCA022715R6070	Compression gland	58

Type	Order number	Description	Page
ESKV25	1SCA022715R6150	Compression gland	58
ESKV32	1SCA022715R6230	Compression gland	58
ESKV40	1SCA022715R6310	Compression gland	58
ESKV50	1SCA022715R6400	Compression gland	58
ESKV63	1SCA022715R6580	Compression gland	58
FGNSUM6X	1SCA010234R6620	Nut	57
KEM50/63	1SCA114809R1001	Adapter for M-thread	59
KIG-1	1SEH650052R6711	Cable flange	56
KIG-2	1SEH650052R6712	Cable flange	56
KIG-221-1	1SEH650052R6713	Cable flange	56
KIG-221-2	1SEH650052R6714	Cable flange	56
KIM13-1	1SEH655267R2050	Cable flange	56
KIM13-2	1SEH655267R2060	Cable flange	56
KRM16/12	1SCA022749R6090	Adapter for M-thread	59
KRM20/12	1SCA022749R6170	Adapter for M-thread	59
KRM25/12	1SCA022749R6980	Adapter for M-thread	59
KSE225 DP	2CMA142411R1000	Aluminum enclosed switch-disconnector	36
KSE240 DP	2CMA142414R1000	Aluminum enclosed switch-disconnector	36
KSE3125 TPN	2CMA144588R1000	Aluminum enclosed switch-disconnector	37
KSE3160	2CMA144712R1000	Aluminum enclosed switch-disconnector	38
KSE325 TPN	2CMA142412R1000	Aluminum enclosed switch-disconnector	36
KSE3250	2CMA144713R1000	Aluminum enclosed switch-disconnector	38
KSE3315	2CMA144714R1000	Aluminum enclosed switch-disconnector	38
KSE340 TPN	2CMA142415R1000	Aluminum enclosed switch-disconnector	36
KSE3500	2CMA144715R1000	Aluminum enclosed switch-disconnector	38
KSE363 D/TPN	2CMA144581R1000	Aluminum enclosed switch-disconnector	37
KSE363 TPN	2CMA144580R1000	Aluminum enclosed switch-disconnector	37
KSE3630	2CMA144716R1000	Aluminum enclosed switch-disconnector	38
KSE380 TPN	2CMA144583R1000	Aluminum enclosed switch-disconnector	37
KSE425 TPSN	2CMA142413R1000	Aluminum enclosed switch-disconnector	36
KSE440 TPSN	2CMA142416R1000	Aluminum enclosed switch-disconnector	36
KSE463 TPSN	2CMA144582R1000	Aluminum enclosed switch-disconnector	37
KSE480 TPSN	2CMA144584R1000	Aluminum enclosed switch-disconnector	37
KSF225 DP	2CMA142435R1000	Aluminum enclosed switch-disconnector	39
KSF325 TPN	2CMA142436R1000	Aluminum enclosed switch-disconnector	39
KSF325 TPN NO	2CMA142442R1000	Aluminum enclosed switch-disconnector	39
KSF340 TPN	2CMA142438R1000	Aluminum enclosed switch-disconnector	39
KSF425 TPSN	2CMA142437R1000	Aluminum enclosed switch-disconnector	39
KSF440 TPSN	2CMA142439R1000	Aluminum enclosed switch-disconnector	39
L6	2CMA144539R1000	Padlock unit	57
LBFEU	1SCA022713R6040	Cable flange	56
LBSI2ALM20	1SCA022713R6210	Cable flange	56
LBSI2ALM32+ 1ALM25	1SCA022722R3520	Cable flange	56
LBSI2ALM40	1SCA022713R6630	Cable flange	56
LBSI3ALM25 +1TM25	1SCA022722R3610	Cable flange	56
LBSI3ALM32	1SCA022713R6550	Cable flange	56
LBSI4ALM25	1SCA022713R6390	Cable flange	56
LBSIU	1SCA022713R6120	Cable flange	56
OA1G01	1SCA022353R4890	Auxiliary contact	51
OA1G10	1SCA022353R4970	Auxiliary contact	51
OA1G10	1SCA022353R4970	Auxiliary contact	51
OA2G11	1SCA022379R8100	Auxiliary contact	51
OA3G01	1SCA022456R7410	Auxiliary contact	51
OA7G10	1SCA022673R1140	Auxiliary contact	51
OBEA01	1SCA022190R3260	Auxiliary contact	51
OBEA01	1SCA022190R3260	Auxiliary contact	51
OBEA01AU	1SCA022185R3730	Auxiliary contact	51
OBEA10	1SCA022190R3000	Auxiliary contact	51

Type	Order number	Description	Page
OBEA10	1SCA022190R3000	Auxiliary contact	51
OBEA10AU	1SCA022185R3310	Auxiliary contact	51
OEZNP1	1SCA022259R7410	Mounting adapter for OBEA	51
OEZXB11L	1SCA022560R4920	Cable flange	57
OEZXB12L	1SCA022560R5140	Cable flange	57
OEZXC 0	1SCA022277R6420	Cable flange	56
OEZXC11L	1SCA022560R5570	Cable flange	57
OEZXC12L	1SCA022560R5730	Cable flange	57
OEZXC1R	1SCA022281R3560	Ring-flange adapter	56
OEZXC2R	1SCA022281R3720	Ring-flange adapter	56
OEZXP120	1SCA022277R2350	Cable entry	54
OEZXP120C	1SCA022338R5360	Cable entry	54
OEZXP240	1SCA022277R2780	Cable entry	54
OEZXP240C	1SCA022338R5520	Cable entry	54
OEZXP24R	1SCA022277R3160	Cable entry	54
OEZXP280	1SCA022277R3910	Cable entry	54
OEZXP280C	1SCA022338R5950	Cable entry	54
OEZXP28R	1SCA022277R4560	Cable entry	54
OEZXP340	1SCA022277R3320	Cable entry	54
OEZXP340C	1SCA022338R5790	Cable entry	54
OEZXP34R	1SCA022277R3750	Cable entry	54
OEZXP380	1SCA022277R4720	Cable entry	54
OEZXP380C	1SCA022338R6170	Cable entry	54
OEZXP38R	1SCA022277R5020	Cable entry	54
OEZXR020	1SCA022656R8130	Ring-flange cover	55
OEZXR023	1SCA022277R5290	Ring-flange cover	55
OEZXR025	1SCA022656R8120	Ring-flange cover	55
OEZXR037	1SCA022277R5450	Ring-flange cover	55
OEZXR040	1SCA022656R8300	Ring-flange cover	55
OEZXR134	1SCA022277R5610	Ring-flange	55
OEZXR143	1SCA022277R5880	Ring-flange	55
OEZXR150	1SCA022277R6000	Ring-flange	55
OEZXR158	1SCA022277R6260	Ring-flange	55
OEZXX143R	1SCA022350R3820	Plate extension for ring-flange	55
OEZXX158R	1SCA022350R3910	Plate extension for ring-flange	55
OEZXX2	1SCA022281R5340	Cable entry gasket	54
OHB125J12	1SCA022381R1560	Handle	50
OHB125J12	1SCA022381R1560	Handle	50
OHB125J12E011	1SCA022589R3340	Handle	50
OHB145J12	1SCA022381R2110	Handle	50
OHB145J12	1SCA022381R2110	Handle	50
OHB274J12	1SCA115920R1001	Handle	50
OHB45J6	1SCA022380R8770	Handle	50
OHB45J6	1SCA022380R8770	Handle	50
OHB45J6E011	1SCA022594R7110	Handle	50
OHB65J6	1SCA022380R9660	Handle	50
OHB65J6	1SCA022380R9660	Handle	50
OHB65J6	1SCA022380R9660	Handle	50
OHB65J6E011	1SCA022383R2480	Handle	50
OHB95J12	1SCA022381R0830	Handle	50
OHB95J12	1SCA022381R0830	Handle	50
OHB95J12E011	1SCA022621R0760	Handle	50
OHY45J6	1SCA022380R8930	Handle	50
OHY45J6	1SCA022380R8930	Handle	50
OHY65J6	1SCA022380R9820	Handle	50
OHY95J12	1SCA022381R1050	Handle	50
OS00-160A00FCC3B	1SCA022315R2690	Plastic enclosed switch fuse	42
OS00-160A00FCC4B	1SCA022315R2850	Plastic enclosed switch fuse	42
OS00-160A00LAA3B	1SCA022325R3530	Steel sheet enclosed switch fuse	46
OS00-160A00LAA3BZ	1SCA022325R3700	Steel sheet enclosed switch fuse	46
OS00-160A00LAA4B	1SCA022320R6450	Steel sheet enclosed switch fuse	47
OS00-160A00LAA4BZ	1SCA022320R6610	Steel sheet enclosed switch fuse	47
OS00-32A00FCC3B	1SCA022315R1450	Plastic enclosed switch fuse	42
OS00-32A00FCC4B	1SCA022315R1880	Plastic enclosed switch fuse	42
OS00-32A00LAA3B	1SCA022325R2560	Steel sheet enclosed switch fuse	46
OS00-32A00LAA3BZ	1SCA022325R2720	Steel sheet enclosed switch fuse	46
OS00-32A00LAA4B	1SCA022325R5310	Steel sheet enclosed switch fuse	47
OS00-32A00LAA4BZ	1SCA022325R5740	Steel sheet enclosed switch fuse	47

Type	Order number	Description	Page
OS00-63A00FCC3B	1SCA022315R1610	Plastic enclosed switch fuse	42
OS00-63A00FCC4B	1SCA022315R2000	Plastic enclosed switch fuse	42
OS00-63A00LAA3B	1SCA022292R9600	Steel sheet enclosed switch fuse	46
OS00-63A00LAA3BZ	1SCA022325R2990	Steel sheet enclosed switch fuse	46
OS00-63A00LAA4B	1SCA022325R5910	Steel sheet enclosed switch fuse	47
OS00-63A00LAA4BZ	1SCA022320R5810	Steel sheet enclosed switch fuse	47
OS00A00FCC3B	1SCA022315R2260	Plastic enclosed switch fuse	42
OS00A00FCC4B	1SCA022315R2420	Plastic enclosed switch fuse	42
OS00A00LAA3B	1SCA022325R3110	Steel sheet enclosed switch fuse	46
OS00A00LAA3BZ	1SCA022325R3370	Steel sheet enclosed switch fuse	46
OS00A00LAA4B	1SCA022320R6020	Steel sheet enclosed switch fuse	47
OS00A00LAA4BZ	1SCA022320R6290	Steel sheet enclosed switch fuse	47
OS100GA4FCC3B	1SCA022280R8560	Plastic enclosed switch fuse	41
OS100GA4FCC4B	1SCA022280R7910	Plastic enclosed switch fuse	41
OS100GA4LUU2FZ	1SCA022320R7930	Steel sheet enclosed switch fuse	43
OS100GA4LUU3FZ	1SCA022320R9210	Steel sheet enclosed switch fuse	45
OS100GA4LUU4FZ	1SCA022320R6110	Steel sheet enclosed switch fuse	45
OS160BB2LUU2FZ	1SCA022320R8150	Steel sheet enclosed switch fuse	43
OS160BB2LUU3FZ	1SCA022320R9470	Steel sheet enclosed switch fuse	45
OS160BB2LUU4FZ	1SCA022320R6370	Steel sheet enclosed switch fuse	45
OS200BB2FCC3B	1SCA022280R9110	Plastic enclosed switch fuse	41
OS200BB2FCC4B	1SCA022280R9700	Plastic enclosed switch fuse	41
OS200BB2LUU2FZ	1SCA022320R8310	Steel sheet enclosed switch fuse	43
OS200BB2LUU3FZ	1SCA022320R9630	Steel sheet enclosed switch fuse	45
OS200BB2LUU4FZ	1SCA022320R6530	Steel sheet enclosed switch fuse	45
OS20PA1FUU3B	1SCA022280R9290	Plastic enclosed switch fuse	41
OS20PA1FUU4B	1SCA022280R9880	Plastic enclosed switch fuse	41
OS20PA1LMM3B	1SCA022281R1510	Steel sheet enclosed switch fuse	44
OS20PA1LMM4B	1SCA022281R2080	Steel sheet enclosed switch fuse	44
OS20PA1LUU3FZ	1SCA022320R8400	Steel sheet enclosed switch fuse	45
OS20PA1LUU4FZ	1SCA022321R0640	Steel sheet enclosed switch fuse	45
OS250D1FCC3B	1SCA022315R3070	Plastic enclosed switch fuse	42
OS250D1FCC4B	1SCA022315R3230	Plastic enclosed switch fuse	42
OS250D1LAA3B	1SCA022325R3960	Steel sheet enclosed switch fuse	46
OS250D1LAA3BZ	1SCA022325R4180	Steel sheet enclosed switch fuse	46
OS250D1LAA4B	1SCA022320R6880	Steel sheet enclosed switch fuse	47
OS250D1LAA4BZ	1SCA022320R7000	Steel sheet enclosed switch fuse	47
OS315BB3FCC3B	1SCA022281R0380	Plastic enclosed switch fuse	41
OS315BB3LUU2FZ	1SCA022320R8580	Steel sheet enclosed switch fuse	43
OS315BB3LUU3FZ	1SCA022320R9800	Steel sheet enclosed switch fuse	45
OS315BB3LUU4FZ	1SCA022320R6700	Steel sheet enclosed switch fuse	45
OS32GA3FCC3B	1SCA022281R1600	Plastic enclosed switch fuse	41
OS32GA3FCC4B	1SCA022280R6190	Plastic enclosed switch fuse	41
OS32GA3LUU2FZ	1SCA022320R7510	Steel sheet enclosed switch fuse	43
OS32GA3LUU3FZ	1SCA022320R8820	Steel sheet enclosed switch fuse	45
OS32GA3LUU4FZ	1SCA022321R1020	Steel sheet enclosed switch fuse	45
OS32PA1FUU3B	1SCA022281R0460	Plastic enclosed switch fuse	41
OS32PA1FUU4B	1SCA022281R1010	Plastic enclosed switch fuse	41
OS32PA1LMM3B	1SCA022281R2670	Steel sheet enclosed switch fuse	44
OS32PA1LMM4B	1SCA022281R3210	Steel sheet enclosed switch fuse	44
OS32PA1LUU3FZ	1SCA022320R8660	Steel sheet enclosed switch fuse	45
OS32PA1LUU4FZ	1SCA022321R0810	Steel sheet enclosed switch fuse	45
OS400BB4FCC3B	1SCA022302R6630	Plastic enclosed switch fuse	41
OS400BB4LUU2FZ	1SCA022320R8740	Steel sheet enclosed switch fuse	43
OS400BB4LUU3FZ	1SCA022321R0050	Steel sheet enclosed switch fuse	45
OS400BB4LUU4FZ	1SCA022320R6960	Steel sheet enclosed switch fuse	45
OS400D2FCC3B	1SCA022315R3400	Plastic enclosed switch fuse	42
OS400D2FCC4B	1SCA022628R6070	Plastic enclosed switch fuse	42
OS400D2LAA3B	1SCA022292R9860	Steel sheet enclosed switch fuse	46
OS400D2LAA3BZ	1SCA022325R4340	Steel sheet enclosed switch fuse	46
OS400D2LAA4B	1SCA022320R7260	Steel sheet enclosed switch fuse	47
OS400D2LAA4BZ	1SCA022320R7420	Steel sheet enclosed switch fuse	47
OS630BC2LUU2FZ	1SCA022320R8910	Steel sheet enclosed switch fuse	43
OS630BC2LUU3FZ	1SCA022321R0210	Steel sheet enclosed switch fuse	45
OS630BC2LUU4FZ	1SCA022320R7180	Steel sheet enclosed switch fuse	45
OS630D3LAA3B	1SCA022325R4510	Steel sheet enclosed switch fuse	46
OS630D3LAA3BZ	1SCA022325R4770	Steel sheet enclosed switch fuse	46
OS630D3LAA4B	1SCA022320R7690	Steel sheet enclosed switch fuse	47
OS630D3LAA4BZ	1SCA022320R7850	Steel sheet enclosed switch fuse	47
OS63GA3FCC3B	1SCA022280R6780	Plastic enclosed switch fuse	41
OS63GA3FCC4B	1SCA022280R7320	Plastic enclosed switch fuse	41
OS63GA3LUU2FZ	1SCA022320R7770	Steel sheet enclosed switch fuse	43

Type	Order number	Description	Page
OS63GA3LUU3FZ	1SCA022320R9040	Steel sheet enclosed switch fuse	45
OS63GA3LUU4FZ	1SCA022320R5990	Steel sheet enclosed switch fuse	45
OS800BC3LUU2FZ	1SCA022320R9120	Steel sheet enclosed switch fuse	43
OS800BC3LUU3FZ	1SCA022321R0480	Steel sheet enclosed switch fuse	45
OS800BC3LUU4FZ	1SCA022320R7340	Steel sheet enclosed switch fuse	45
OS800D3LAA3B	1SCA022325R4930	Steel sheet enclosed switch fuse	46
OS800D3LAA3BZ	1SCA022325R5150	Steel sheet enclosed switch fuse	46
OS800D3LAA4B	1SCA022320R8070	Steel sheet enclosed switch fuse	47
OS800D3LAA4BZ	1SCA022320R8230	Steel sheet enclosed switch fuse	47
OT1000KLAA3B	1SCA022370R3830	Steel sheet enclosed switch-disconnector	28
OT1000KLAA3BZ	1SCA022569R2870	Steel sheet enclosed switch-disconnector	24
OT1000KLAA4B	1SCA022437R9760	Steel sheet enclosed switch-disconnector	29
OT1000KLAA4BZ	1SCA022569R4220	Steel sheet enclosed switch-disconnector	26
OT1000KLUU3BZ	1SCA022750R1780	Steel sheet enclosed switch-disconnector	24
OT1250KLAA3B	1SCA022350R0640	Steel sheet enclosed switch-disconnector	28
OT1250KLAA3BZ	1SCA022569R4310	Steel sheet enclosed switch-disconnector	24
OT1250KLAA4B	1SCA022437R9480	Steel sheet enclosed switch-disconnector	29
OT1250KLAA4BZ	1SCA022569R4490	Steel sheet enclosed switch-disconnector	26
OT1250KLUU3BZ	1SCA022750R1860	Steel sheet enclosed switch-disconnector	24
OT125ALAA3B	1SCA022302R5910	Steel sheet enclosed switch-disconnector	28
OT125ALAA3BZ	1SCA022302R6710	Steel sheet enclosed switch-disconnector	24
OT125ALAA4B	1SCA022340R9560	Steel sheet enclosed switch-disconnector	29
OT125ALAA4BZ	1SCA022342R4870	Steel sheet enclosed switch-disconnector	26
OT125ALAA6BZ	1SCA022689R5090	Steel sheet enclosed switch-disconnector	27
OT125ALUU3BZ	1SCA022750R1430	Steel sheet enclosed switch-disconnector	24
OT125ALUU4BZ	1SCA022833R6770	Steel sheet enclosed switch-disconnector	26
OT125ALUU6BZ	1SCA022833R6930	Steel sheet enclosed switch-disconnector	27
OT125ELBB3B	1SCA022461R9070	Steel sheet enclosed switch-disconnector	28
OT125ELBB4B	1SCA022467R8910	Steel sheet enclosed switch-disconnector	29
OT125ELBB4BZ	1SCA022468R0140	Steel sheet enclosed switch-disconnector	25
OT1600KLAA3B	1SCA022437R8520	Steel sheet enclosed switch-disconnector	28
OT1600KLAA3BZ	1SCA022569R4570	Steel sheet enclosed switch-disconnector	24
OT1600KLAA4B	1SCA022437R9920	Steel sheet enclosed switch-disconnector	29
OT1600KLAA4BZ	1SCA022569R4650	Steel sheet enclosed switch-disconnector	26
OT1600KLUU3BZ	1SCA022750R1940	Steel sheet enclosed switch-disconnector	24
OT160EFCC3B	1SCA022278R7030	Plastic enclosed switch-disconnector	15
OT160EFCC3BA	1SCA022833R6510	Plastic enclosed switch-disconnector	19
OT160EFCC4B	1SCA022548R6620	Plastic enclosed switch-disconnector	16
OT160EFCC4BA	1SCA022833R6690	Plastic enclosed switch-disconnector	20
OT160ELAA3B	1SCA022280R3410	Steel sheet enclosed switch-disconnector	28
OT160ELAA3BZ	1SCA022302R7100	Steel sheet enclosed switch-disconnector	24
OT160ELAA4B	1SCA022340R9720	Steel sheet enclosed switch-disconnector	29
OT160ELAA4BZ	1SCA022342R5090	Steel sheet enclosed switch-disconnector	26
OT160ELAA6BZ	1SCA022468R7400	Steel sheet enclosed switch-disconnector	27
OT160ELUU3BZ	1SCA022479R5120	Steel sheet enclosed switch-disconnector	24
OT160ELUU4BZ	1SCA022833R6850	Steel sheet enclosed switch-disconnector	26
OT160ELUU6BZ	1SCA022833R7070	Steel sheet enclosed switch-disconnector	27
OT160KLAA3C	1SCA120678R1001	Steel sheet enclosed change-over switch	40
OT160KLAA4C	1SCA120697R1001	Steel sheet enclosed change-over switch	40
OT16ELMM3B	1SCA022461R7960	Steel sheet enclosed switch-disconnector	28
OT16ELMM3BZ	1SCA022461R9150	Steel sheet enclosed switch-disconnector	23
OT16ELMM3C	1SCA022473R1070	Steel sheet enclosed change-over switch	40
OT16ELMM4B	1SCA022467R7940	Steel sheet enclosed switch-disconnector	29
OT16ELMM4BZ	1SCA022467R9050	Steel sheet enclosed switch-disconnector	25
OT16ELMM6BZ	1SCA022589R9620	Steel sheet enclosed switch-disconnector	27
OT16ELPP3C	1SCA022473R1310	Steel sheet enclosed change-over switch	40
OT200KFCC3B	1SCA022278R1510	Plastic enclosed switch-disconnector	15
OT200KFCC3BA	1SCA022833R9950	Plastic enclosed switch-disconnector	19
OT200KFCC4B	1SCA022530R4450	Plastic enclosed switch-disconnector	16
OT200KFCC4BA	1SCA022834R0530	Plastic enclosed switch-disconnector	20
OT200KLAA3B	1SCA022280R4060	Steel sheet enclosed switch-disconnector	28
OT200KLAA3BZ	1SCA022302R7520	Steel sheet enclosed switch-disconnector	24
OT200KLAA3C	1SCA022280R2360	Steel sheet enclosed change-over switch	40
OT200KLAA4B	1SCA022341R0140	Steel sheet enclosed switch-disconnector	29
OT200KLAA4BZ	1SCA022342R5410	Steel sheet enclosed switch-disconnector	26
OT200KLAA4C	1SCA022474R6930	Steel sheet enclosed change-over switch	40
OT200KLAA6BZ	1SCA022717R9520	Steel sheet enclosed switch-disconnector	27
OT200KLUU3BZ	1SCA022602R0630	Steel sheet enclosed switch-disconnector	24
OT200KLUU4BZ	1SCA022800R5740	Steel sheet enclosed switch-disconnector	26
OT200KLUU6BZ	1SCA022802R4610	Steel sheet enclosed switch-disconnector	27
OT250KFCC3B	1SCA022278R2150	Plastic enclosed switch-disconnector	15
OT250KFCC3BA	1SCA022834R0020	Plastic enclosed switch-disconnector	19
OT250KFCC4B	1SCA022530R4530	Plastic enclosed switch-disconnector	16
OT250KFCC4BA	1SCA022834R0610	Plastic enclosed switch-disconnector	20
OT250KLAA3B	1SCA022280R4650	Steel sheet enclosed switch-disconnector	28
OT250KLAA3BZ	1SCA022302R7950	Steel sheet enclosed switch-disconnector	24
OT250KLAA3C	1SCA022280R2520	Steel sheet enclosed change-over switch	40
OT250KLAA4B	1SCA022341R0570	Steel sheet enclosed switch-disconnector	29
OT250KLAA4BZ	1SCA022342R5840	Steel sheet enclosed switch-disconnector	26
OT250KLAA4C	1SCA022474R7070	Steel sheet enclosed change-over switch	40
OT250KLAA6BZ	1SCA022802R5770	Steel sheet enclosed switch-disconnector	27
OT250KLUU3BZ	1SCA022602R0710	Steel sheet enclosed switch-disconnector	24
OT250KLUU4BZ	1SCA022800R7360	Steel sheet enclosed switch-disconnector	26
OT250KLUU6BZ	1SCA022802R4530	Steel sheet enclosed switch-disconnector	27
OT25ELMM3B	1SCA022461R8180	Steel sheet enclosed switch-disconnector	28
OT25ELMM3BZ	1SCA022461R9310	Steel sheet enclosed switch-disconnector	23
OT25ELMM3C	1SCA022473R1580	Steel sheet enclosed change-over switch	40
OT25ELMM4B	1SCA022467R8160	Steel sheet enclosed switch-disconnector	29
OT25ELMM4BZ	1SCA022467R9210	Steel sheet enclosed switch-disconnector	25
OT25ELMM6BZ	1SCA022591R5330	Steel sheet enclosed switch-disconnector	27
OT25ELPP3C	1SCA022473R1740	Steel sheet enclosed change-over switch	40
OT315KFCC3B	1SCA022278R2740	Plastic enclosed switch-disconnector	15
OT315KFCC3BA	1SCA022834R0110	Plastic enclosed switch-disconnector	19
OT315KFCC4B	1SCA022548R6710	Plastic enclosed switch-disconnector	16
OT315KFCC4BA	1SCA022834R0700	Plastic enclosed switch-disconnector	20
OT315KLAA3B	1SCA022280R5200	Steel sheet enclosed switch-disconnector	28
OT315KLAA3BZ	1SCA022302R8330	Steel sheet enclosed switch-disconnector	24
OT315KLAA3C	1SCA022280R2790	Steel sheet enclosed change-over switch	40
OT315KLAA4B	1SCA022341R0900	Steel sheet enclosed switch-disconnector	29
OT315KLAA4BZ	1SCA022342R6220	Steel sheet enclosed switch-disconnector	26
OT315KLAA4C	1SCA022474R7150	Steel sheet enclosed change-over switch	40
OT315KLAA6BZ	1SCA022804R1110	Steel sheet enclosed switch-disconnector	27
OT315KLUU3BZ	1SCA022572R6010	Steel sheet enclosed switch-disconnector	24
OT315KLUU4BZ	1SCA022801R0070	Steel sheet enclosed switch-disconnector	26
OT315KLUU6BZ	1SCA022804R0900	Steel sheet enclosed switch-disconnector	27
OT32ELMM3B	1SCA022461R8340	Steel sheet enclosed switch-disconnector	28
OT32ELMM3BZ	1SCA022461R9580	Steel sheet enclosed switch-disconnector	23
OT32ELMM3C	1SCA022473R1910	Steel sheet enclosed change-over switch	40
OT32ELMM4B	1SCA022467R8320	Steel sheet enclosed switch-disconnector	29
OT32ELMM4BZ	1SCA022467R9480	Steel sheet enclosed switch-disconnector	25
OT32ELMM6BZ	1SCA022589R8810	Steel sheet enclosed switch-disconnector	27
OT32ELPP3C	1SCA022473R2120	Steel sheet enclosed change-over switch	40
OT400DFCC3B	1SCA022278R3390	Plastic enclosed switch-disconnector	15
OT400DFCC3BA	1SCA022834R0290	Plastic enclosed switch-disconnector	19
OT400DFCC4B	1SCA022609R5480	Plastic enclosed switch-disconnector	16
OT400DFCC4BA	1SCA022834R0880	Plastic enclosed switch-disconnector	20
OT400DLAA3B	1SCA022279R9710	Steel sheet enclosed switch-disconnector	28
OT400DLAA3BZ	1SCA022302R8760	Steel sheet enclosed switch-disconnector	24
OT400DLAA3C	1SCA022280R2950	Steel sheet enclosed change-over switch	40
OT400DLAA4B	1SCA022341R1380	Steel sheet enclosed switch-disconnector	29
OT400DLAA4BZ	1SCA022342R6650	Steel sheet enclosed switch-disconnector	26
OT400DLAA4C	1SCA022292R6680	Steel sheet enclosed change-over switch	40
OT400DLAA6BZ	1SCA022804R1200	Steel sheet enclosed switch-disconnector	27
OT400DLUU3BZ	1SCA022602R0800	Steel sheet enclosed switch-disconnector	24
OT400DLUU4BZ	1SCA022801R0660	Steel sheet enclosed switch-disconnector	26
OT400DLUU6BZ	1SCA022804R1030	Steel sheet enclosed switch-disconnector	27
OT45ELMM3B	1SCA022461R8510	Steel sheet enclosed switch-disconnector	28
OT45ELMM3BZ	1SCA022461R9740	Steel sheet enclosed switch-disconnector	23
OT45ELMM3C	1SCA022473R2390	Steel sheet enclosed change-over switch	40
OT45ELMM4B	1SCA022467R8590	Steel sheet enclosed switch-disconnector	29
OT45ELMM4BZ	1SCA022467R9640	Steel sheet enclosed switch-disconnector	25
OT45ELMM6BZ	1SCA022468R1380	Steel sheet enclosed switch-disconnector	27
OT45ELPP3C	1SCA022473R2550	Steel sheet enclosed change-over switch	40
OT630KFCC3B	1SCA022278R3980	Plastic enclosed switch-disconnector	15
OT630KFCC3BA	1SCA022834R0370	Plastic enclosed switch-disconnector	19
OT630KFCC4B	1SCA022584R5700	Plastic enclosed switch-disconnector	16
OT630KFCC4BA	1SCA022834R1000	Plastic enclosed switch-disconnector	20
OT630KLAA3B	1SCA022280R0310	Steel sheet enclosed switch-disconnector	28
OT630KLAA3BZ	1SCA022302R9140	Steel sheet enclosed switch-disconnector	24
OT630KLAA3C	1SCA022280R3170	Steel sheet enclosed change-over switch	40
OT630KLAA4B	1SCA022341R1710	Steel sheet enclosed switch-disconnector	29
OT630KLAA4BZ	1SCA022342R7030	Steel sheet enclosed switch-disconnector	26
OT630KLAA4C	1SCA022475R1180	Steel sheet enclosed change-over switch	40
OT630KLAA6BZ	1SCA022834R1420	Steel sheet enclosed switch-disconnector	27

Type	Order number	Description	Page
OT630KLUU3BZ	1SCA022750R1510	Steel sheet enclosed switch-disconnector	24
OT630KLUU4BZ	1SCA022830R4490	Steel sheet enclosed switch-disconnector	26
OT630KLUU6BZ	1SCA022834R1260	Steel sheet enclosed switch-disconnector	27
OT63ELMM3B	1SCA022461R8770	Steel sheet enclosed switch-disconnector	28
OT63ELMM3BZ	1SCA022461R9910	Steel sheet enclosed switch-disconnector	23
OT63ELMM3C	1SCA022473R2710	Steel sheet enclosed change-over switch	40
OT63ELMM4B	1SCA022467R7430	Steel sheet enclosed switch-disconnector	29
OT63ELMM4BZ	1SCA022467R9810	Steel sheet enclosed switch-disconnector	25
OT63ELPP3C	1SCA022473R2980	Steel sheet enclosed change-over switch	40
OT800KFCC3B	1SCA022303R0310	Plastic enclosed switch-disconnector	15
OT800KFCC3BA	1SCA022834R0450	Plastic enclosed switch-disconnector	19
OT800KFCC4B	1SCA022609R5560	Plastic enclosed switch-disconnector	16
OT800KFCC4BA	1SCA022834R1180	Plastic enclosed switch-disconnector	20
OT800KLAA3B	1SCA022280R0910	Steel sheet enclosed switch-disconnector	28
OT800KLAA3BZ	1SCA022302R9570	Steel sheet enclosed switch-disconnector	24
OT800KLAA3C	1SCA022389R8310	Steel sheet enclosed change-over switch	40
OT800KLAA4B	1SCA022337R4830	Steel sheet enclosed switch-disconnector	29
OT800KLAA4BZ	1SCA022342R7460	Steel sheet enclosed switch-disconnector	26
OT800KLAA4C	1SCA022580R4340	Steel sheet enclosed change-over switch	40
OT800KLAA6BZ	1SCA022834R1340	Steel sheet enclosed switch-disconnector	27
OT800KLUU3BZ	1SCA022750R1600	Steel sheet enclosed switch-disconnector	24
OT800KLUU4BZ	1SCA022830R4570	Steel sheet enclosed switch-disconnector	26
OT800KLUU6BZ	1SCA022834R1690	Steel sheet enclosed switch-disconnector	27
OTDCP16S11M	1SCA125129R1001	Plastic enclosed switch-disconnector	22
OTDCP16S12M	1SCA125153R1001	Plastic enclosed switch-disconnector	22
OTDCP16S22M	1SCA125095R1001	Plastic enclosed switch-disconnector	22
OTDCP16SA11M	1SCA125126R1001	Plastic enclosed switch-disconnector	22
OTDCP16SA12M	1SCA125150R1001	Plastic enclosed switch-disconnector	22
OTDCP16SA22M	1SCA125094R1001	Plastic enclosed switch-disconnector	22
OTDCP25S11M	1SCA125130R1001	Plastic enclosed switch-disconnector	22
OTDCP25S12M	1SCA125154R1001	Plastic enclosed switch-disconnector	22
OTDCP25S22M	1SCA125092R1001	Plastic enclosed switch-disconnector	22
OTDCP25SA11M	1SCA125127R1001	Plastic enclosed switch-disconnector	22
OTDCP25SA12M	1SCA125151R1001	Plastic enclosed switch-disconnector	22
OTDCP25SA22M	1SCA125091R1001	Plastic enclosed switch-disconnector	22
OTDCP32S11M	1SCA125131R1001	Plastic enclosed switch-disconnector	22
OTDCP32S12M	1SCA125155R1001	Plastic enclosed switch-disconnector	22
OTDCP32S22M	1SCA125093R1001	Plastic enclosed switch-disconnector	22
OTDCP32SA11M	1SCA125128R1001	Plastic enclosed switch-disconnector	22
OTDCP32SA12M	1SCA125152R1001	Plastic enclosed switch-disconnector	22
OTDCP32SA22M	1SCA125090R1001	Plastic enclosed switch-disconnector	22
OTL100B3B	1SCA022562R8350	Steel sheet enclosed switch-disconnector	23
OTL100B3U	1SCA022562R8430	Steel sheet enclosed switch-disconnector	23
OTL100B4B	1SCA022562R8510	Steel sheet enclosed switch-disconnector	25
OTL100B4U	1SCA022562R8600	Steel sheet enclosed switch-disconnector	25
OTL100BA3B	1SCA022562R8940	Steel sheet enclosed switch-disconnector	30
OTL100BA3U	1SCA022562R9080	Steel sheet enclosed switch-disconnector	30
OTL100BA4B	1SCA022562R9160	Steel sheet enclosed switch-disconnector	30
OTL100BA4U	1SCA022562R9240	Steel sheet enclosed switch-disconnector	30
OTL125B3B	1SCA022562R9590	Steel sheet enclosed switch-disconnector	23
OTL125B3U	1SCA022562R9670	Steel sheet enclosed switch-disconnector	23
OTL125B4B	1SCA022562R9830	Steel sheet enclosed switch-disconnector	25
OTL125B4U	1SCA022562R9910	Steel sheet enclosed switch-disconnector	25
OTL125BA3B	1SCA022563R0250	Steel sheet enclosed switch-disconnector	30
OTL125BA3U	1SCA022563R0330	Steel sheet enclosed switch-disconnector	30
OTL125BA4B	1SCA022563R0410	Steel sheet enclosed switch-disconnector	30
OTL125BA4U	1SCA022563R0500	Steel sheet enclosed switch-disconnector	30
OTL16B3M	1SCA022562R1260	Steel sheet enclosed switch-disconnector	23
OTL16B4M	1SCA022562R4120	Steel sheet enclosed switch-disconnector	25
OTL16B6M	1SCA022562R1690	Steel sheet enclosed switch-disconnector	27
OTL16BA3M	1SCA022562R1850	Steel sheet enclosed switch-disconnector	30
OTL16BA4M	1SCA022562R2070	Steel sheet enclosed switch-disconnector	30
OTL16BA6M	1SCA022562R2230	Steel sheet enclosed switch-disconnector	31
OTL25B3M	1SCA022562R2400	Steel sheet enclosed switch-disconnector	23
OTL25B4M	1SCA022562R2660	Steel sheet enclosed switch-disconnector	25
OTL25B6M	1SCA022562R2820	Steel sheet enclosed switch-disconnector	27
OTL25BA3M	1SCA022562R3040	Steel sheet enclosed switch-disconnector	30
OTL25BA4M	1SCA022562R3210	Steel sheet enclosed switch-disconnector	30
OTL25BA6M	1SCA022562R3470	Steel sheet enclosed switch-disconnector	31
OTL32B3M	1SCA022562R3630	Steel sheet enclosed switch-disconnector	23
OTL32B4M	1SCA022562R3800	Steel sheet enclosed switch-disconnector	25
OTL32B6M	1SCA022562R4010	Steel sheet enclosed switch-disconnector	27

Type	Order number	Description	Page
OTL32BA3M	1SCA022562R4100	Steel sheet enclosed switch-disconnector	30
OTL32BA4M	1SCA022562R4360	Steel sheet enclosed switch-disconnector	30
OTL32BA6M	1SCA022562R4520	Steel sheet enclosed switch-disconnector	31
OTL45B3M	1SCA022562R4790	Steel sheet enclosed switch-disconnector	23
OTL45B4M	1SCA022562R4950	Steel sheet enclosed switch-disconnector	25
OTL45B6B	1SCA022610R4730	Steel sheet enclosed switch-disconnector	27
OTL45B6U	1SCA022610R4810	Steel sheet enclosed switch-disconnector	27
OTL45BA3M	1SCA022562R5330	Steel sheet enclosed switch-disconnector	30
OTL45BA4M	1SCA022562R5500	Steel sheet enclosed switch-disconnector	30
OTL45BA6B	1SCA022610R5110	Steel sheet enclosed switch-disconnector	31
OTL45BA6U	1SCA022610R5200	Steel sheet enclosed switch-disconnector	31
OTL63B3M	1SCA022562R5920	Steel sheet enclosed switch-disconnector	23
OTL63B4M	1SCA022562R6140	Steel sheet enclosed switch-disconnector	25
OTL63B6B	1SCA022610R4900	Steel sheet enclosed switch-disconnector	27
OTL63B6U	1SCA022610R5030	Steel sheet enclosed switch-disconnector	27
OTL63BA3M	1SCA022562R6570	Steel sheet enclosed switch-disconnector	30
OTL63BA4M	1SCA022562R6730	Steel sheet enclosed switch-disconnector	30
OTL63BA6B	1SCA022610R5380	Steel sheet enclosed switch-disconnector	31
OTL63BA6U	1SCA022610R5460	Steel sheet enclosed switch-disconnector	31
OTP100B3B	1SCA126055R1001	Plastic enclosed switch-disconnector	15
OTP100B3M	1SCA126054R1001	Plastic enclosed switch-disconnector	15
OTP100B3U	1SCA126056R1001	Plastic enclosed switch-disconnector	15
OTP100BA3B	1SCA126067R1001	Plastic enclosed switch-disconnector	19
OTP100BA3M	1SCA126069R1001	Plastic enclosed switch-disconnector	19
OTP100BA3U	1SCA126057R1001	Plastic enclosed switch-disconnector	19
OTP125B3B	1SCA022383R3700	Plastic enclosed switch-disconnector	15
OTP125B3U	1SCA022401R3270	Plastic enclosed switch-disconnector	15
OTP125B4B	1SCA022401R5210	Plastic enclosed switch-disconnector	16
OTP125B4M	1SCA022812R7260	Plastic enclosed switch-disconnector	16
OTP125B4U	1SCA022401R5300	Plastic enclosed switch-disconnector	16
OTP125B6B	1SCA022401R6610	Plastic enclosed switch-disconnector	17
OTP125B6M	1SCA022812R7340	Plastic enclosed switch-disconnector	17
OTP125B6U	1SCA022401R6700	Plastic enclosed switch-disconnector	17
OTP125BA3B	1SCA022389R7420	Plastic enclosed switch-disconnector	19
OTP125BA3U	1SCA022401R3940	Plastic enclosed switch-disconnector	19
OTP125BA4B	1SCA022571R8510	Plastic enclosed switch-disconnector	20
OTP125BA4M	1SCA022812R7510	Plastic enclosed switch-disconnector	20
OTP125BA4U	1SCA022459R7160	Plastic enclosed switch-disconnector	20
OTP125BA6B	1SCA022401R7510	Plastic enclosed switch-disconnector	21
OTP125BA6M	1SCA022812R7690	Plastic enclosed switch-disconnector	21
OTP125BA6U	1SCA022401R7690	Plastic enclosed switch-disconnector	21
OTP16B3M	1SCA022383R2130	Plastic enclosed switch-disconnector	15
OTP16B3M25	1SCA022699R2880	Plastic enclosed switch-disconnector	15
OTP16B3P	1SCA022383R0940	Plastic enclosed switch-disconnector	15
OTP16B4M	1SCA022401R4160	Plastic enclosed switch-disconnector	16
OTP16B4P	1SCA022419R8620	Plastic enclosed switch-disconnector	16
OTP16B6M	1SCA022401R5560	Plastic enclosed switch-disconnector	17
OTP16B6P	1SCA022401R5480	Plastic enclosed switch-disconnector	17
OTP16BA3M	1SCA022401R3350	Plastic enclosed switch-disconnector	19
OTP16BA3M25	1SCA022699R2960	Plastic enclosed switch-disconnector	19
OTP16BA3P	1SCA022389R6880	Plastic enclosed switch-disconnector	19
OTP16BA4M	1SCA022459R6510	Plastic enclosed switch-disconnector	20
OTP16BA4P	1SCA022401R4080	Plastic enclosed switch-disconnector	20
OTP16BA6M	1SCA022401R6880	Plastic enclosed switch-disconnector	21
OTP16BA6P	1SCA022394R5330	Plastic enclosed switch-disconnector	21
OTP16HB3M	1SCA022401R2970	Plastic enclosed switch-disconnector	15
OTP16HB3M25	1SCA022699R3690	Plastic enclosed switch-disconnector	15
OTP16HB3P	1SCA022389R6700	Plastic enclosed switch-disconnector	15
OTP16HB3U	1SCA022401R3010	Plastic enclosed switch-disconnector	15
OTP25B3M	1SCA022383R2640	Plastic enclosed switch-disconnector	15
OTP25B3P	1SCA022383R2560	Plastic enclosed switch-disconnector	15
OTP25B4M	1SCA022401R4320	Plastic enclosed switch-disconnector	16
OTP25B4P	1SCA022401R4240	Plastic enclosed switch-disconnector	16
OTP25B6M	1SCA022401R5720	Plastic enclosed switch-disconnector	17
OTP25B6P	1SCA022401R5640	Plastic enclosed switch-disconnector	17
OTP25BA3M	1SCA022401R3430	Plastic enclosed switch-disconnector	19
OTP25BA3P	1SCA022389R6960	Plastic enclosed switch-disconnector	19
OTP25BA4M	1SCA022459R6600	Plastic enclosed switch-disconnector	20
OTP25BA4P	1SCA022433R8140	Plastic enclosed switch-disconnector	20
OTP25BA6M	1SCA022401R6960	Plastic enclosed switch-disconnector	21
OTP25BA6P	1SCA022394R5410	Plastic enclosed switch-disconnector	21
OTP32B3M	1SCA022389R8400	Plastic enclosed switch-disconnector	15

Type	Order number	Description	Page
OTP32B3P	1SCA022389R7510	Plastic enclosed switch-disconnector	15
OTP32B4M	1SCA022401R4590	Plastic enclosed switch-disconnector	16
OTP32B4P	1SCA022401R4410	Plastic enclosed switch-disconnector	16
OTP32B6M	1SCA022401R5990	Plastic enclosed switch-disconnector	17
OTP32B6P	1SCA022401R5810	Plastic enclosed switch-disconnector	17
OTP32BA3M	1SCA022401R3510	Plastic enclosed switch-disconnector	19
OTP32BA3P	1SCA022389R7000	Plastic enclosed switch-disconnector	19
OTP32BA4M	1SCA022459R6780	Plastic enclosed switch-disconnector	20
OTP32BA4P	1SCA022433R8220	Plastic enclosed switch-disconnector	20
OTP32BA6M	1SCA022401R7000	Plastic enclosed switch-disconnector	21
OTP32BA6P	1SCA022394R5680	Plastic enclosed switch-disconnector	21
OTP45B3M	1SCA022383R3020	Plastic enclosed switch-disconnector	15
OTP45B3P	1SCA022383R2990	Plastic enclosed switch-disconnector	15
OTP45B4M	1SCA022401R4750	Plastic enclosed switch-disconnector	16
OTP45B4P	1SCA022401R4670	Plastic enclosed switch-disconnector	16
OTP45B6M	1SCA022401R6110	Plastic enclosed switch-disconnector	17
OTP45B6P	1SCA022401R6020	Plastic enclosed switch-disconnector	17
OTP45BA3M	1SCA022401R3600	Plastic enclosed switch-disconnector	19
OTP45BA3P	1SCA022389R7180	Plastic enclosed switch-disconnector	19
OTP45BA4M	1SCA022459R6860	Plastic enclosed switch-disconnector	20
OTP45BA4P	1SCA022571R5080	Plastic enclosed switch-disconnector	20
OTP45BA6M	1SCA022401R7180	Plastic enclosed switch-disconnector	21
OTP45BA6P	1SCA022394R5840	Plastic enclosed switch-disconnector	21
OTP63B3M	1SCA022383R3450	Plastic enclosed switch-disconnector	15
OTP63B3P	1SCA022383R3370	Plastic enclosed switch-disconnector	15
OTP63B4M	1SCA022401R4910	Plastic enclosed switch-disconnector	16
OTP63B4P	1SCA022401R4830	Plastic enclosed switch-disconnector	16
OTP63B6M	1SCA022401R6370	Plastic enclosed switch-disconnector	17
OTP63B6P	1SCA022401R6290	Plastic enclosed switch-disconnector	17
OTP63BA3M	1SCA022401R3780	Plastic enclosed switch-disconnector	19
OTP63BA3P	1SCA022389R7260	Plastic enclosed switch-disconnector	19
OTP63BA4M	1SCA022459R6940	Plastic enclosed switch-disconnector	20
OTP63BA4P	1SCA022571R5160	Plastic enclosed switch-disconnector	20
OTP63BA6M	1SCA022401R7260	Plastic enclosed switch-disconnector	21
OTP63BA6P	1SCA022394R5760	Plastic enclosed switch-disconnector	21
OTR100B3B	1SCA022568R0510	Stainless steel sheet enclosed switch-disconnector	32
OTR100B3U	1SCA022568R0600	Stainless steel sheet enclosed switch-disconnector	32
OTR100B4B	1SCA022568R2130	Stainless steel sheet enclosed switch-disconnector	32
OTR100B4U	1SCA022568R2210	Stainless steel sheet enclosed switch-disconnector	32
OTR100BA3B	1SCA022569R7320	Stainless steel sheet enclosed switch-disconnector	34
OTR100BA3U	1SCA022569R7590	Stainless steel sheet enclosed switch-disconnector	34
OTR100BA4B	1SCA022569R7410	Stainless steel sheet enclosed switch-disconnector	34
OTR100BA4U	1SCA022569R7670	Stainless steel sheet enclosed switch-disconnector	34
OTR125B3B	1SCA022568R0780	Stainless steel sheet enclosed switch-disconnector	32
OTR125B3U	1SCA022568R0860	Stainless steel sheet enclosed switch-disconnector	32
OTR125B4B	1SCA022568R2300	Stainless steel sheet enclosed switch-disconnector	32
OTR125B4U	1SCA022568R2480	Stainless steel sheet enclosed switch-disconnector	32
OTR125BA3B	1SCA022569R7750	Stainless steel sheet enclosed switch-disconnector	34
OTR125BA3U	1SCA022569R7910	Stainless steel sheet enclosed switch-disconnector	34
OTR125BA4B	1SCA022569R7830	Stainless steel sheet enclosed switch-disconnector	34
OTR125BA4U	1SCA022569R8050	Stainless steel sheet enclosed switch-disconnector	34
OTR16B3M	1SCA022567R9420	Stainless steel sheet enclosed switch-disconnector	32
OTR16B4M	1SCA022568R1080	Stainless steel sheet enclosed switch-disconnector	32

Type	Order number	Description	Page
OTR16B6M	1SCA022575R2440	Stainless steel sheet enclosed switch-disconnector	33
OTR16BA3M	1SCA022569R5110	Stainless steel sheet enclosed switch-disconnector	34
OTR16BA4M	1SCA022569R5200	Stainless steel sheet enclosed switch-disconnector	34
OTR16BA6M	1SCA022575R2610	Stainless steel sheet enclosed switch-disconnector	35
OTR25B3M	1SCA022567R9690	Stainless steel sheet enclosed switch-disconnector	32
OTR25B4M	1SCA022568R1240	Stainless steel sheet enclosed switch-disconnector	32
OTR25B6M	1SCA022575R2870	Stainless steel sheet enclosed switch-disconnector	33
OTR25BA3M	1SCA022569R5540	Stainless steel sheet enclosed switch-disconnector	34
OTR25BA4M	1SCA022569R5620	Stainless steel sheet enclosed switch-disconnector	34
OTR25BA6M	1SCA022575R3090	Stainless steel sheet enclosed switch-disconnector	35
OTR32B3M	1SCA022567R9850	Stainless steel sheet enclosed switch-disconnector	32
OTR32B4M	1SCA022568R1410	Stainless steel sheet enclosed switch-disconnector	32
OTR32B6M	1SCA022575R3250	Stainless steel sheet enclosed switch-disconnector	33
OTR32BA3M	1SCA022569R5970	Stainless steel sheet enclosed switch-disconnector	34
OTR32BA4M	1SCA022569R6010	Stainless steel sheet enclosed switch-disconnector	34
OTR32BA6M	1SCA022575R3410	Stainless steel sheet enclosed switch-disconnector	35
OTR45B3M	1SCA022567R0010	Stainless steel sheet enclosed switch-disconnector	32
OTR45B4M	1SCA022568R1670	Stainless steel sheet enclosed switch-disconnector	32
OTR45B6B	1SCA022611R6660	Stainless steel sheet enclosed switch-disconnector	33
OTR45B6U	1SCA022611R6820	Stainless steel sheet enclosed switch-disconnector	33
OTR45BA3M	1SCA022569R6350	Stainless steel sheet enclosed switch-disconnector	34
OTR45BA4M	1SCA022569R6430	Stainless steel sheet enclosed switch-disconnector	34
OTR45BA6B	1SCA022611R6910	Stainless steel sheet enclosed switch-disconnector	35
OTR45BA6U	1SCA022611R7040	Stainless steel sheet enclosed switch-disconnector	35
OTR63B3M	1SCA022567R0270	Stainless steel sheet enclosed switch-disconnector	32
OTR63B4M	1SCA022568R1830	Stainless steel sheet enclosed switch-disconnector	32
OTR63B6B	1SCA022611R7120	Stainless steel sheet enclosed switch-disconnector	33
OTR63B6U	1SCA022611R7210	Stainless steel sheet enclosed switch-disconnector	33
OTR63BA3M	1SCA022569R6780	Stainless steel sheet enclosed switch-disconnector	34
OTR63BA4M	1SCA022569R6860	Stainless steel sheet enclosed switch-disconnector	34
OTR63BA6B	1SCA022611R7390	Stainless steel sheet enclosed switch-disconnector	35
OTR63BA6U	1SCA022611R7470	Stainless steel sheet enclosed switch-disconnector	35
OTZC13	1SCA022767R6910	Bridging bar	53
OTZC14	1SCA022767R7040	Bridging bar	53
OTZC23	1SCA022767R7120	Bridging bar	53
OTZC24	1SCA022767R7210	Bridging bar	53
OTZC33	1SCA022785R7020	Bridging bar	53
OTZC34	1SCA022785R7110	Bridging bar	53
OTZR1	1SCA100352R1001	Reversing bar	53
OTZR2	1SCA104647R1001	Reversing bar	53

Type	Order number	Description	Page
OTZR3	1SCA100355R1001	Reversing bar	53
OZXA32	1SCA022683R4110	Connection bar	53
OZXA33	1SCA022685R0310	Connection bar	53
OZXA38	1SCA022790R3740	Connection bar	53
OZXA39	1SCA022785R2490	Connection bar	53
OZXK1	2CMA144522R1000	Auxiliary contact	51
OZXK12	2CMA144521R1000	Auxiliary contact	51
YJTB3	1SCA122170R1001	Condensation water outlet	59
YMF-MB10215	1SCA022191R2170	Cover plate	57
YMF-MB10345	1SCA010352R7030	Screw	57
YMF-MB10674	1SCA022229R0010	Mounting lug	57
YMF-MB10861SET	1SCA022715R9090	Cable flange	57
YMF-MB10862SET	1SCA022715R9170	Cable flange	57
YMF-MK10440	1SCA022660R7130	Casket	57

Notes

Notes

Contact us

ABB Oy
Breakers and Switches
P.O. Box 622
FI-65101 Vaasa, Finland
Phone: +358 10 22 11
Fax: +358 10 22 45708
E-Mail: firstname.surname@fi.abb.com

ABB AB
Cewe-Control
Box 1005
SE-611 29 Nyköping, Sweden
Phone: +46 155 29 50 00
Fax: +46 155 28 81 10
E-Mail: firstname.surname@se.abb.com

www.abb.com

The technical data and dimensions are valid at the time of printing. We reserve the right to subsequent alterations.

ISO 9001 BUREAU VERITAS Certification

ISO 14001 BUREAU VERITAS Certification

OHSAS 18001 BUREAU VERITAS Certification

Catalogue OT3GB 12-05 1SCC340009C0201

Producted by: A&V Insinöörit Oy / Tekninen viestintä, Vaasa, Finland

Power and productivity
for a better world™